T8V.320

SPECIFICATIONS

Power at crankshaft	235 kW [320 hp]
Displacement	4.5 l [272 in³]
Configuration	8 cylinders V design 90° 4 valves per cylinder
Operation type	4 strokes Diesel
Bore & Stroke	86 x 96 mm [3.39 x 3.78 in]
Compression ratio	15.8 : 1
Rated speed	3800 rpm
Idling speed	550 rpm
Peak torque	697 Nm
Peak torque speed	2500 rpm

Engine base	Toyota
Fuel system	Direct injection High pressure Common Rail Electronically controlled
Air intake	Twin turbocharger
Cooling	Closed cooling with heat exchanger
Max mounting angle	7° Front down 7° Front up
Alternator	12 Volt 120 Amp
Rating	M6
Emission compliance	EPA marine Tier 3 RCD2 2013/53/EU
Dry weight	435 kg [959 lbs]

nanni

ENERGY IN BLUE

T8V.320

235 kW [320 hp] at 3800 rpm

TECHNICAL DESCRIPTION

ENGINE BLOCK

- 8 Cylinders V design 90°
- 4 Valves per cylinder
- Dual Overhead camshafts (DOHC)
- Water cooled exhaust manifold
- Internal balancers

FUEL SYSTEM

- Common Rail injection system
- Fuel filter with hand primer
- Integrated fuel cooler

LUBRICATION SYSTEM

- Replacable full-flow oil filter
- Oil dipstick
- Transmission oil cooler

COOLING SYSTEM

- Closed cooling with heat exchanger
- Gear driven self-priming raw water pump
- Coolant circulating pump
- Water cooled exhaust elbow

ELECTRICAL SYSTEM & INSTRUMENTATION

- 12 V / 120 A alternator
- 12 V Electrical system
- Complete instrumentation including key switch and alarms

AIR INTAKE

- Twin turbocharger

OTHER FEATURES

- Flexible engine mountings

OPTIONAL EQUIPMENTS & ACCESSORIES

- Complete marine propulsion systems
- Marine transmission adaptation kits
- Throttle and shift controls
- Additional instrumentation, Flying bridge extension harness
- Complete fuel systems
- Complete exhaust systems

RATINGS

- Up to 500 annual operating hours
- Load factor up to 35%
- Full power for no more than 30 minutes out of each 8 hours of operation. The remaining time must be at, or below cruising speed

TRANSMISSIONS

- Contact your local Nanni dealer for more details and availability for transmission model and type.

PERFORMANCE CURVES

POWER AT CRANKSHAFT

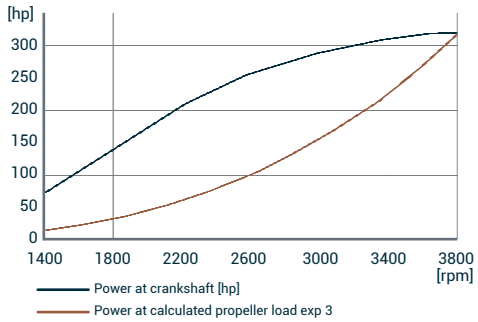

TORQUE AT CRANKSHAFT

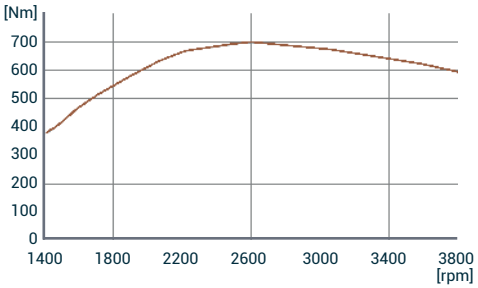

FUEL CONSUMPTION

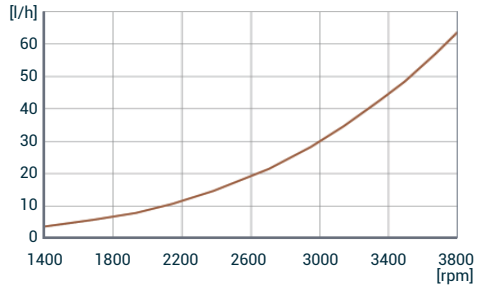

DIMENSIONS

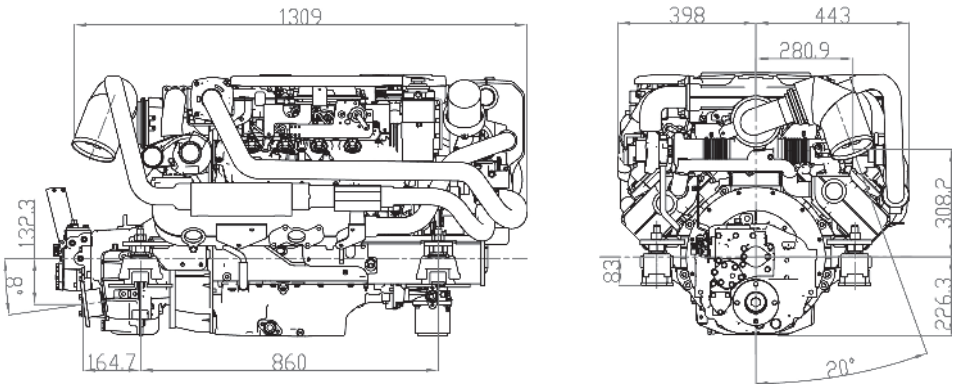

NANNI INDUSTRIES S.A.S.
11, Avenue Mariotte - Zone Industrielle
33260 La Teste - France
Tel: +33 (0)5 56 22 30 60
Fax: +33 (0)5 56 22 30 79

Technical data according to ISO 8665. This document is not contractual. Nanni reserves the right to modify any of the characteristics stated in this document without notice, in a constant effort to improve the quality of its products. Images and illustrations may shown non standard equipements. All combination of equipment & accessory are not available.

DGBXXC01022