MARINE TRANSMISSIONS

Hydraulic DMT Series

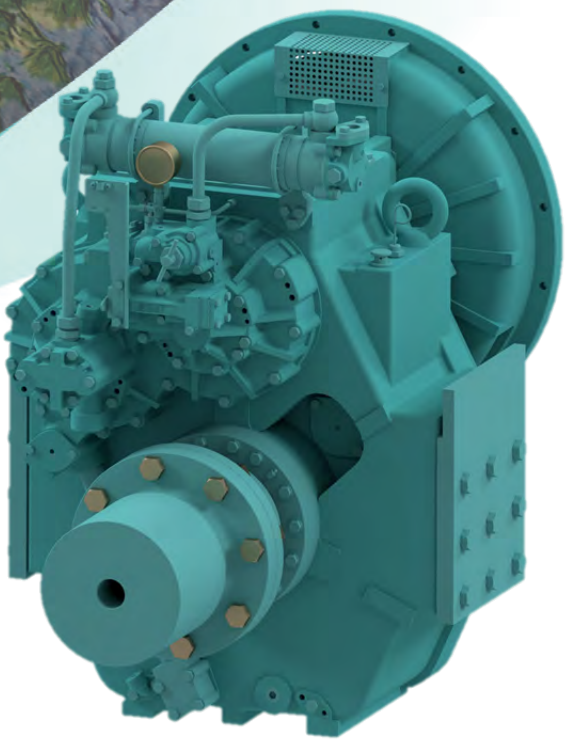

D-I INDUSTRIAL CO., LTD.

MARINE TRANSMISSION
STEERING SYSTEM
POWER TAKE OFF

www.d-i.co.kr

Your Reliable Partner

BETTER AND BETTER PRODUCTS
FOR THE FULL SATISFACTION OF CUSTOMER
IN ANY SEA

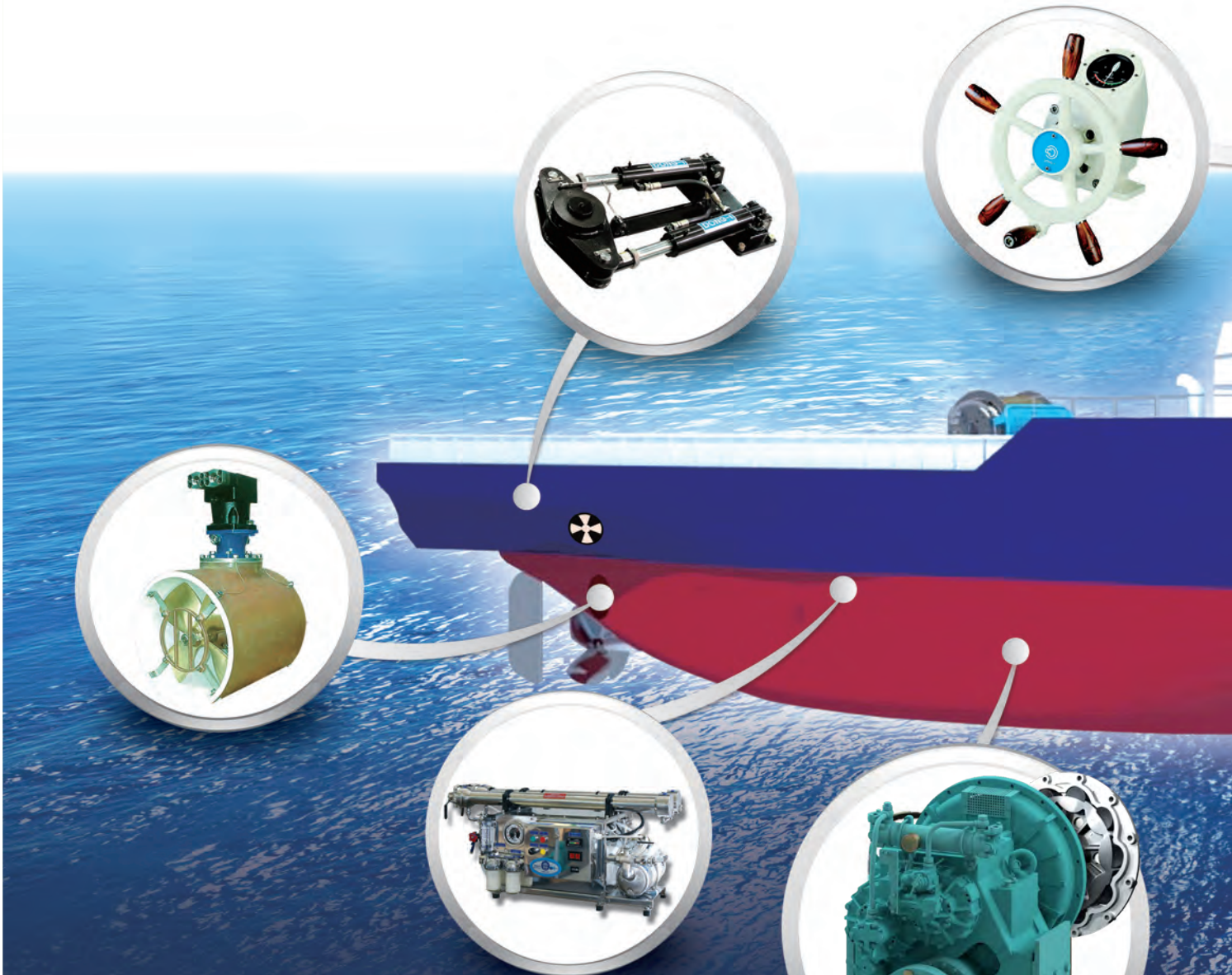

Summary

1. Address : 13, Namgang-ro 1367beon-gil, Jinju-si,
Gyeongsangnam-do, Republic of korea (52781)
2. Home page : www.d-i.co.kr
3. Foundation of the company : 14th May, 1990
4. Foundation of R&D department : 10th May, 2005
5. Product : Marine transmission, Marine steering systems, PTO(Power take off), Integral shaft supporter, Side Thrusters.
6. Capacity of production : 6,000 units /year
7. The number of staffs : 122

Business Fields

Marine Transmissions, PTOs(Power Take Offs), Hydraulic Steering Systems, Integral Shaft Supporters, Flexible Couplings, Side Thrusters, Electronic Control System, Water Makers etc.

D-I INDUSTRIAL CO., LTD supports safe and convenient marine activities with the quality products through Total Marine Solutions which can meet customized requirements.

MARINE TRANSMISSIONS

HYDRAULIC COMPACT CLUTCH TYPE
SAME TORQUE IN AHEAD & ASTERN
STANDARD SAE BELL HOUSING WITH COUPLINGS

DMT50A

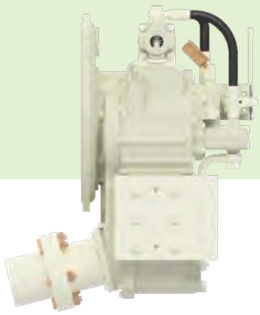

DMT100IV

DMT140H

PRODUCT CAPACITIES

MODEL	Ratio	Max. Input Torque (kgf.m)	CAPACITY/ RPM		INPUT RATING						MAX RPM	APPROX. DRY WEIGHT (kg)	STANDARD BELL HOUSING (SAE)
					1800RPM		2100RPM		2300RPM				
			kW	HP	kW	HP	kW	HP	kW	HP			
DMT25AL	1.64, 2.07, 2.52, 2.96, 3.32	30	0.030	0.041	55	73	63	85	70	94	3500	77	3, 4, 5
DMT50A	1.61, 2.06, 2.45 2.82, 3.12, 3.46	55	0.056	0.075	101	136	118	158	129	173	3000	143	1, 2, 3, 4
DMT90A	1.61, 2.06, 2.45 2.82, 3.12, 3.46	87	0.089	0.120	161	216	188	252	205	276	3000	159	1, 2, 3, 4
DMT100IV	1.21, 1.54, 1.84 2.12, 2.52	103	0.105	0.141	190	255	222	297	243	326	4000	150	2, 3, 4
DMT110A	1.77, 2.09, 2.42 2.82, 3.19, 3.81	110	0.112	0.151	202	272	236	317	259	348	2800	212	1, 2, 3, 4
DMT140H	1.97, 2.57, 3.03 3.46	130	0.133	0.178	239	321	280	375	306	411	2800	250	1, 2, 3, 4
DMTP5100	1.47, 1.76, 1.93	168	0.172	0.231	310	416	361	485	396	531	2500	263	1, 2, 3
	2.48, 3.08	150	0.153	0.206	276	370	322	433	353	474			
	3.46	130	0.133	0.178	239	321	280	375	306	411			

※ Classification and specification of the table could be different. Please contact us about it.

DIMENSIONS

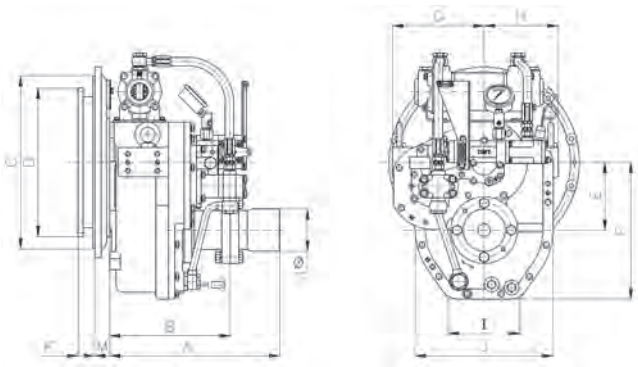

(DMT 25AL, 50A, 90A, 110A, 140H)

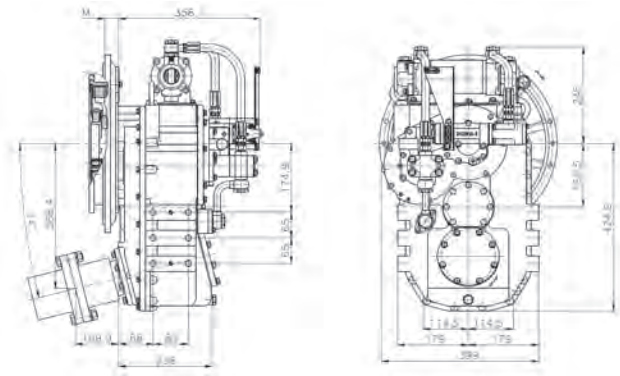

(DMT 100 IV)

Model	A	B	E	F	G	H	I	J	Ø
DMT25AL	355	255	118	244	177	135	157	260	72
DMT50A	403	286	160	323	217	175	170	326	100
DMT90A	471	325	160	323	228	175	170	326	120
DMT110A	487	335	195	388	249	197	224	386	140
DMT140H	496	344	195	388	249	197	224	386	140
DMTP5100	531	391	195	390	270	250	206	383	150

Model	Housing	Driving ring	C	D	M	K
DMT25AL	SAE #3	11.5"	409	352	34	39
	SAE #4	10"	361	314	30	53
		7.5"	361	241	30	30
	SAE #5	7.5"	314	241	24	30
DMT 50A DMT 90A DMT 100IV DMT 110A DMT 140H	SAE #1	14"	511	466	75	25
	SAE #2	11.5"	447	352	35	39
	SAE #3	11.5"	409	352	35	39
	SAE #4	10"	361	314	50	53
DMTP5100	SAE #1	14"	511	466	64	25
	SAE #2	11.5"	447	352	46	39
	SAE #3	11.5"	409	352	69	39

DMT240H

DMT280H

DMT430H

OPTIONS

- TROLLING VALVE
- DUAL STAGE COUPLING
- ELECTRONIC SHIFTING VALVES

PRODUCT CAPACITIES

MODEL	Ratio	Max. Input Torque (kgf.m)	CAPACITY/ RPM		INPUT RATING						MAX RPM	APPROX. DRY WEIGHT(kg)	STANDARD BELL HOUSING
					1800RPM		2100RPM		2300RPM				
			kW	HP	kW	HP	kW	HP	kW	HP			
DMT150H	1.83, 2.09, 2.51 3.08, 3.43	168	0.172	0.231	310	416	361	485	396	531	2500	287	1, 2
DMT190H	1.83, 2.09, 2.51 3.08, 3.43	180	0.184	0.247	332	445	387	519	425	570	2500	300	1, 2
DMT240H	1.50, 1.97, 2.44 2.93, 3.40	218	0.224	0.300	403	541	471	632	516	692	2500	400	0, 1
DMT260H	2.06, 2.50, 2.92 3.26	258	0.265	0.355	477	640	557	747	610	818	2500	490	0, 1
DMT280H	2.06, 2.50, 2.92 3.26	298	0.306	0.410	550	738	642	862	704	944	2500	490	0, 1
DMT400H	1.43, 1.72, 2.03	453	0.465	0.624	838	1124	978	1311	1070	1436	2300	660	0, 1
	2.46	397	0.407	0.546	734	984	856	1148	937	1257			
	2.75	323	0.331	0.444	596	799	696	934	762	1022			
DMT430H	2.05, 2.43, 2.93	453	0.465	0.623	837	1123	977	1310	1070	1435	2300	694	0, 1
	3.23	430	0.442	0.592	795	1066	927	1243	1016	1363			
	3.40	408	0.419	0.562	754	1011	880	1180	964	1293			
DMT550H	1.43, 1.64, 1.81 2.03	551	0.565	0.758	1018	1366	1188	1593	1301	1745	2300	715	0, 1
	2.33	537	0.551	0.739	992	1331	1158	1553	1268	1701			
	2.60	485	0.498	0.667	896	1202	1045	1402	1145	1535			
	2.91	404	0.415	0.557	748	1003	872	1169	956	1282			

※ Classification and specification of the table could be different. Please contact us about it.

DIMENSIONS

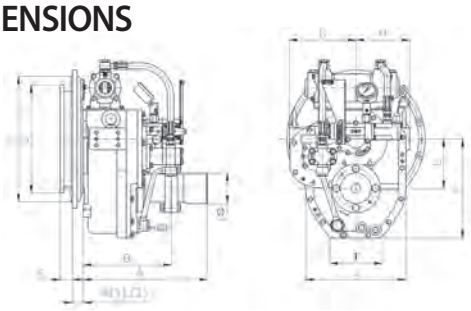

(DMT150H, 190H, 240H, 260H, 280H, 400H, 430H, 550H)

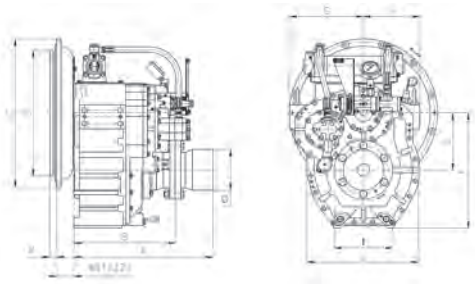

(DMT150H, 190H, 240H, 260H, 280H, 400H, 430H, 550H)

Model	A	B	E	F	G	H	I	J	Ø
DMT150H	518	378	211	428	275	210	218	416	150
DMT190H	590	390	211	428	275	210	218	415	185
DMT240H	639	439	227	448	330	240	254	447	185
DMT260H	653	453	254	484	330	235	276	458	190
DMT280H	653	453	254	484	330	235	276	458	190
DMT400H	705	505	235	450	360	360	266	436	190
DMT430H	720	520	285	562	375	281	333	525	185
DMT550H	771	551	235	464	360	275	282	449	190

Model	Housing	Driving ring	C	D	M(1)	M(2)	K
DMT150H	SAE #1	14"	511	466	64	88	25
DMT190H	SAE #2	11.5"	447	352	46	0	39
DMT240H	SAE #0	18"	647	571	81	130	15
DMT260H	SAE #0	14"	647	466	81	130	25
DMT280H	SAE #1	14"	511	466	81	122	25
DMT400H	SAE #0	18"	647	571	102	130	15
	SAE #0	14"	647	466	102	130	25
	SAE #1	14"	511	466	102	122	25
DMT430H	SAE#0	18"	647	571	-	130	15
	SAE#1	14"	511	466	-	122	25
DMT550H	SAE #0	18"	647	571	-	160	15
	SAE #0	14"	647	466	-	-	25
	SAE #1	14"	511	466	-	122	25

※ M(1) : Standard Coupling Dimension, M(2) : High Flexible Coupling Dimension

D-I HIGH RATIO MARINE TRANSMISSIONS

HYDRAULIC COMPACT CLUTCH TYPE
SAME TORQUE IN AHEAD & ASTERN
STANDARD SAE BELL HOUSING WITH COUPLINGS

DMT100HL

DMT260HL

DMTP6500

OPTIONS

- TROLLING VALVE
- DUAL STAGE COUPLING
- ELECTRONIC SHIFTING VALVES

PRODUCT CAPACITIES

MODEL	Ratio	Max. Input Torque (kgf.m)	CAPACITY/ RPM		INPUT RATING						MAX RPM	APPROX. DRY WEIGHT(kg)	STANDARD BELL HOUSING
					1800RPM		2100RPM		2300RPM				
			kW	HP	kW	HP	kW	HP	kW	HP			
DMT100HL	4.07, 4.50, 4.95	89	0.091	0.122	164	219	191	256	209	281	3000	263	1, 2, 3
	5.29	86	0.088	0.118	158	213	185	248	202	272			
	5.95	75	0.076	0.103	138	185	161	216	176	236			
DMT135HL	4.07	131	0.134	0.180	241	324	282	378	309	415	2800	293	1, 2, 3
	4.50	125	0.128	0.172	230	309	269	361	295	396			
	4.95	115	0.118	0.158	214	287	249	334	272	365			
DMT170HL	4.04, 4.48	168	0.172	0.231	310	416	361	485	396	531	2500	352	1, 2
DMT180HL	5.15, 5.96	168	0.172	0.231	310	416	361	485	396	531	2500	475	1, 2
DMT190HL	4.04, 4.48	180	0.184	0.247	332	445	387	519	425	570	2500	370	1, 2
DMT260HL	3.53, 4.08, 4.52	258	0.265	0.355	477	640	557	747	610	818	2500	640	0, 1
	5.04	239	0.245	0.328	441	591	514	690	564	756			
DMTP6500	5.11, 5.62, 5.91	258	0.265	0.356	477	640	557	747	610	818	2300	900	0, 1
	6.57, 6.95	238	0.245	0.328	440	590	514	689	563	755			

※ Classification and specification of the table could be different. Please contact us about it.

DIMENSIONS

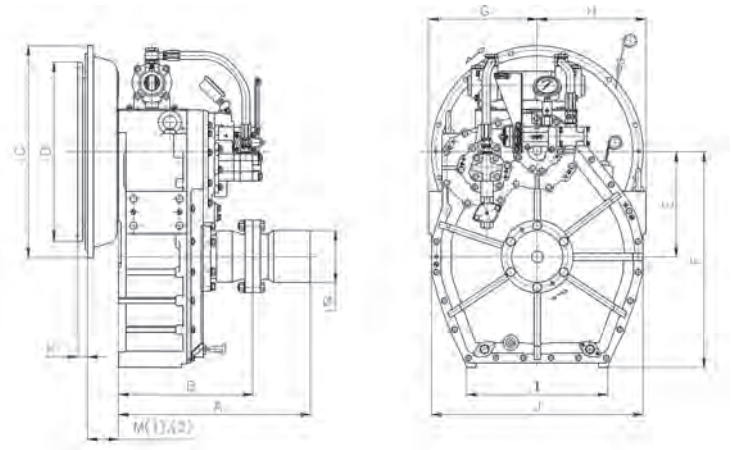

(DMT100HL, 135HL, 170HL, 180HL, 190HL, 260HL, DMTP6500)

Model	A	B	E	F	G	H	I	J	Ø
DMT100HL	501	351	274	563	284	284	370	552	134
DMT135HL	503	351	274	563	284	284	370	552	148
DMT170HL	580	390	260	521	280	258	316	510	180
DMT180HL	617	427	331	667	337	337	425	654	180
DMT190HL	625	405	261	530	280	258	307	510	200
DMT260HL	673	453	331	662	337	337	432	654	200
DMTP6500	777	527	415	842	440	440	448	756	220

Model	Housing	Driving ring	C	D	M(1)	M(2)	K
DMT100HL DMT135HL	SAE #1	14"	511	466	81	-	25
	SAE #2	11.5"	447	352	44	-	39
	SAE #3	11.5"	409	352	44	-	39
DMT170HL DMT180HL DMT190HL	SAE #1	14"	511	466	64	88	25
	SAE #2	11.5"	447	352	46	-	39
DMT260HL DMTP6500	SAE #0	18"	647	571	81	130	15
	SAE #0	14"	647	466	81	130	25
	SAE #1	14"	511	466	81	122	25

※ M(1) : Standard Coupling Dimension, M(2) : High Flexible Coupling Dimension

DMT330DL

DMT450DL

DMT561HL

DMT600DL

PRODUCT CAPACITIES

MODEL	Ratio	Max. Input Torque (kgf.m)	CAPACITY/ RPM		INPUT RATING						MAX RPM	APPROX. DRY WEIGHT(kg)	STANDARD BELL HOUSING
					1800RPM		2100RPM		2300RPM				
			kW	HP	kW	HP	kW	HP	kW	HP			
DMT300HL	2.61	310	0.318	0.426	573	769	668	896	732	982	2300	764	0, 1
	3.10	310	0.318	0.426	573	769	668	896	732	982			
	3.56	298	0.305	0.410	550	738	642	862	703	943			
	4.13	292	0.300	0.402	539	723	630	845	690	926			
	4.59	286	0.293	0.394	529	710	617	828	676	907			
DMT460HL	3.02, 3.28, 3.56, 4.07	453	0.465	0.623	837	1123	976	1309	1070	1435	2300	955	0, 1
	4.48	409	0.420	0.563	756	1013	881	1182	966	1296			
	4.95	374	0.383	0.514	690	926	806	1081	883	1184			
DMT561HL	3.02, 3.28, 3.56, 4.07	550	0.564	0.757	1017	1364	1186	1590	1299	1742	2300	977	0, 1
	4.48	526	0.540	0.723	972	1303	1134	1520	1242	1665			
	4.95	435	0.446	0.599	805	1080	939	1259	1028	1379			
DMT600DL	3.02, 3.28, 3.56, 4.07	625	0.641	0.860	1155	1549	1348	1807	-	-	2200	1209	0
	4.48	591	0.606	0.814	1092	1465	1275	1710	-	-			
	4.95	541	0.555	0.745	1001	1342	1167	1566	-	-			

※ Classification and specification of the table could be different. Please contact us about it.

DIMENSIONS

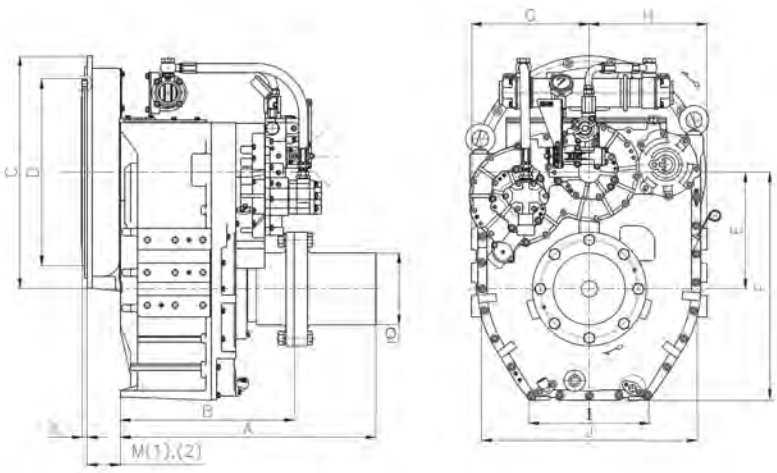

Model	A	B	E	F	G	H	I	J	Ø
DMT300HL	673	453	319	647	325	330	438	660	200
DMT460HL	781	531	357	698	360	360	377	659	220
DMT561HL	802	552	357	710	360	360	460	681	220
DMT600DL	921	671	357	710	360	360	460	642	245

Model	Housing	Driving ring	C	D	M(1)	M(2)	K
DMT300HL	SAE #0	18"	647	571	81	130	15
	SAE #0	14"	647	466	81	130	25
	SAE #1	14"	511	466	81	122	25
DMT460HL	SAE #0	18"	647	571	102	130	15
	SAE #0	14"	647	466	102	130	25
	SAE #1	14"	511	466	102	122	25
DMT561HL	SAE #0	18"	647	571	-	160	15
	SAE #0	14"	647	466	-	-	25
	SAE #1	14"	511	466	-	122	25
DMT600DL	SAE #0	18"	647	571	-	160	15

※ M(1) : Standard Coupling Dimension, M(2) : High Flexible Coupling Dimension

D-I DL TYPE MARINE TRANSMISSIONS

DL Model
Designed to 4 row bearing type

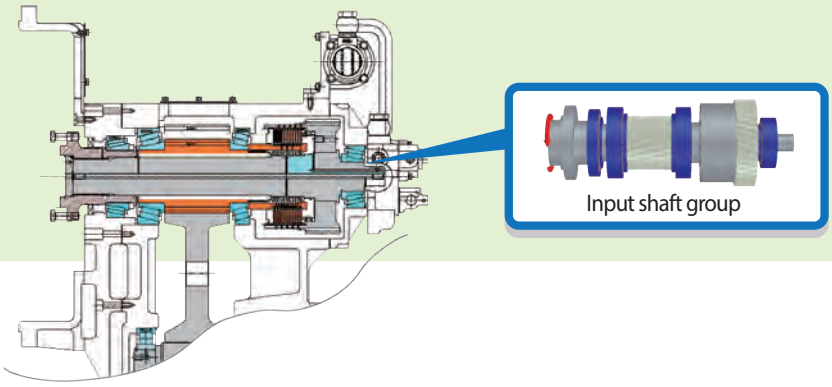

PRODUCT CAPACITIES

MODEL	Ratio	Max. Input Torque (kgf.m)	CAPACITY/ RPM		INPUT RATING						MAX RPM	APPROX. DRY WEIGHT(kg)	STANDARD BELL HOUSING
					1800RPM		2100RPM		2300RPM				
			kW	HP	kW	HP	kW	HP	kW	HP			
DMT330DL	2.61	310	0.318	0.426	573	769	668	896	732	982	2300	768	0, 1
	3.10	310	0.318	0.426	573	769	668	896	732	982			
	3.56	298	0.305	0.410	550	738	642	862	703	943			
	4.13	292	0.300	0.402	539	723	630	845	690	926			
	4.59	286	0.293	0.394	529	710	617	828	676	907			
DMT450DL	3.02, 3.28, 3.56, 4.07	453	0.465	0.623	837	1123	976	1309	1070	1435	2300	910	0, 1
	4.48	409	0.420	0.563	756	1013	881	1182	966	1296			
	4.95	374	0.383	0.514	690	926	806	1081	883	1184			
DMT600DL	3.02, 3.28, 3.56, 4.07	625	0.641	0.860	1155	1549	1348	1807	-	-	2200	1209	0
	4.48	591	0.606	0.814	1092	1465	1275	1710	-	-			
	4.95	541	0.555	0.745	1001	1342	1167	1566	-	-			
DMT600BL	4.12	625	0.642	0.860	1155	1548	1348	1806	-	-	2200	-	0
	4.48	625	0.642	0.860	1155	1548	1348	1806	-	-			
	5.11	588	0.603	0.809	1086	1456	1267	1698	-	-			
	5.62	545	0.560	0.750	1008	1350	1175	1575	-	-			
	5.91	499	0.513	0.687	923	1236	1076	1442	-	-			

※ Classification and specification of the table could be different. Please contact us about it.

DIMENSIONS

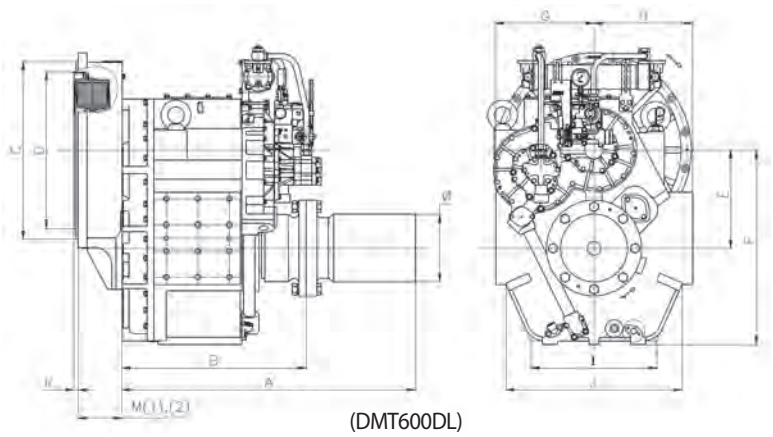

(DMT600DL)

Model	A	B	E	F	G	H	I	J	Ø
DMT330DL	689	469	319	647	330	330	428	570	220
DMT450DL	779	529	357	713	360	360	416	672	220
DMT600DL	921	671	357	710	360	360	460	642	245
DMT600BL	1197	687	415	844	440	440	460	811	300

Model	Housing	Driving ring	C	D	M(1)	M(2)	K
DMT330DL	SAE #0	18"	647	571	122	130	15
DMT450DL	SAE #0	18"	647	571	-	130	15
DMT600DL	SAE #0	18"	647	571	-	160	15
DMT600BL	SAE #0	18"	647	571	-	160	15

※ M(1) : Standard Coupling Dimension, M(2) : High Flexible Coupling Dimension

D-I DL TYPE MARINE TRANSMISSIONS

■ H, HL type Vs DL type

H, HL Type

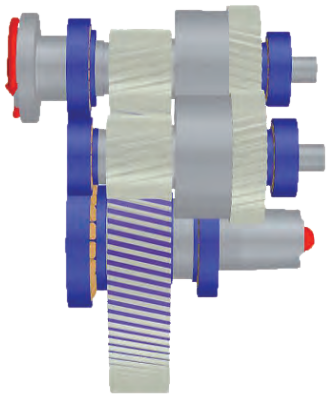

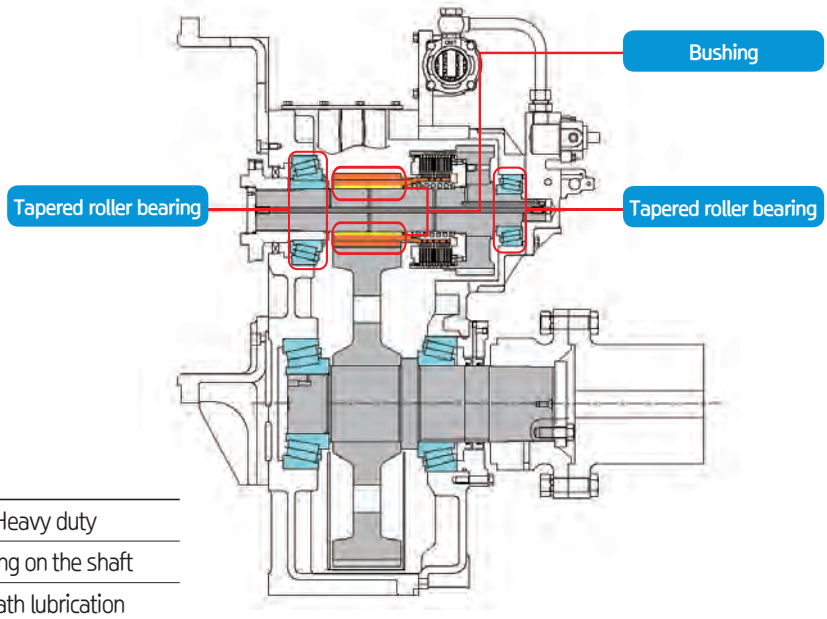

Duty	~Heavy duty
Method of Pinion gear support	Bushing on the shaft
Gear lubrication	Oil bath lubrication

DL Type

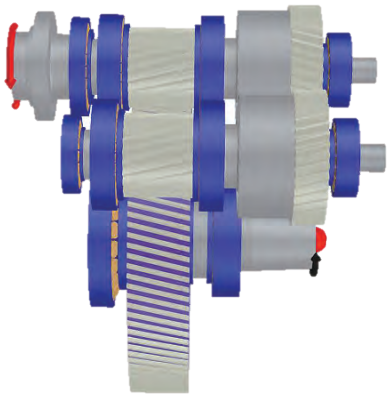

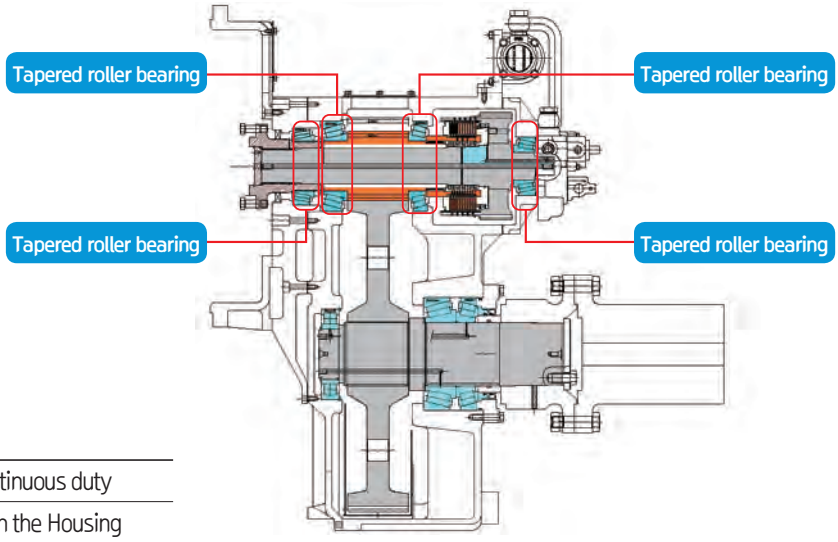

Duty	~Continuous duty
Method of Pinion gear support	TRP on the Housing
Gear lubrication	Forced oil lubrication

D-TROLLING MARINE TRANSMISSIONS

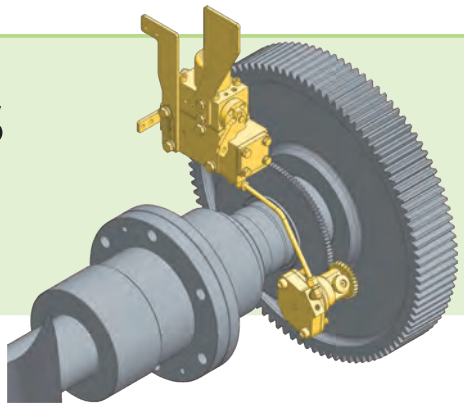

D–Trolling Valve

D trolling valve is a device that allows self speed control for propeller rotation by lowering the clutch pressure and slipping the friction plate.

PRODUCT CAPACITIES

MODEL	Ratio	Max. Input Torque (kgf.m)	CAPACITY/ RPM		INPUT RATING						MAX RPM	APPROX. DRY WEIGHT(kg)	STANDARD BELL HOUSING
					1800RPM		2100RPM		2300RPM				
			kW	HP	kW	HP	kW	HP	kW	HP			
DMT 150H	1.83, 2.09, 2.51 3.08, 3.43	168	0.172	0.231	310	416	361	485	396	531	2500	287	1, 2
DMT 240H	1.50, 1.97, 2.44 2.93, 3.40	218	0.224	0.300	403	541	471	632	516	692	2500	400	0, 1
DMT 280H	2.06, 2.50, 2.92 3.26	298	0.306	0.410	550	738	642	862	704	944	2500	490	0, 1
DMT 430H	2.05, 2.43, 2.93	453	0.465	0.623	837	1123	977	1310	1070	1435	2300	694	0, 1
	3.23	430	0.442	0.592	795	1066	927	123	1016	1363			
	3.40	408	0.419	0.562	754	1011	880	1180	964	1293			

※ Classification and specification of the table could be different. Please contact us about it.

DIMENSIONS

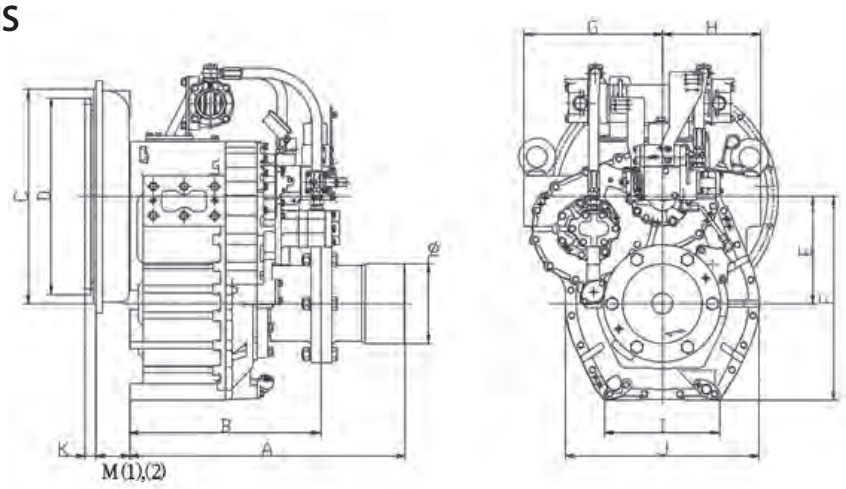

(DMT150H, 240H, 280H, 430H)

Model	A	B	E	F	G	H	I	J	Ø
DMT 150H	518	378	211	428	275	210	218	416	150
DMT 240H	639	439	227	448	330	240	254	447	185
DMT 280H	653	453	254	484	330	235	276	458	190
DMT 430H	720	520	285	562	375	281	333	525	185

Model	Housing	Driving ring	C	D	M(1)	M(2)	K
DMT 150H	SAE #1	14"	511	466	64	88	25
	SAE #2	11.5"	447	352	46	-	39
DMT 240H DMT 280H	SAE #0	18"	647	571	81	130	15
	SAE #0	14"	647	466	81	130	25
	SAE #1	14"	511	466	81	122	25
DMT 430H	SAE#0	18"	647	571	-	130	15
	SAE#1	14"	511	466	-	122	25

※ M(1) : Standard Coupling Dimension, M(2) : High Flexible Coupling Dimension

TROLLING VALVE

SLOW SPEED OPERATION OR MANEUVERING

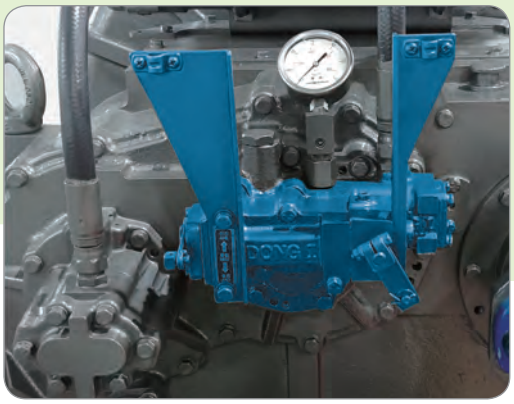

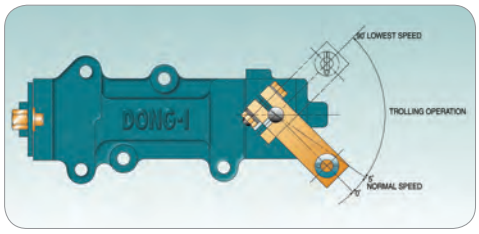

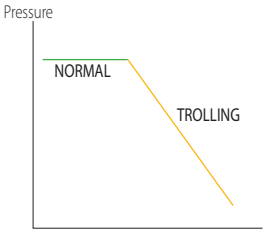

The TROLLING VALVE is designed to allow very low speed operation by precisely controlling clutch slippage

The trolling valve is fitted directly on the selector valve. Trolling operation can be applied both ahead and astern direction. Trolling valve operation must be limited to a maximum of 900 engine RPM

D-TROLLING VALVE (2nd Generation)

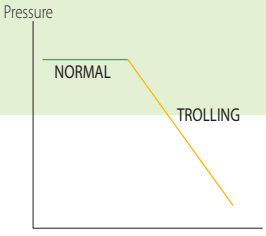

- D trolling valve is a device that allows self speed control for propeller rotation by lowering the clutch pressure and slipping the friction plate.
- The D trolling valve consists of D trolling group, governor group, and pipe ass'y. A gear is attached to the output shaft group connected to the propeller shaft to detect the propeller rotation speed.
- The clutch pressure is determined by the balance between the pressure by the lever switching position of the D control valve and the governor pressure, stabilizes the propeller speed according to the load variation.

Trolling valve operation must be limited to a maximum of 900 engine RPM.

ELECTRONIC CONVERSION VALVE

SUITABLE FOR ELECTRONIC ENGINE

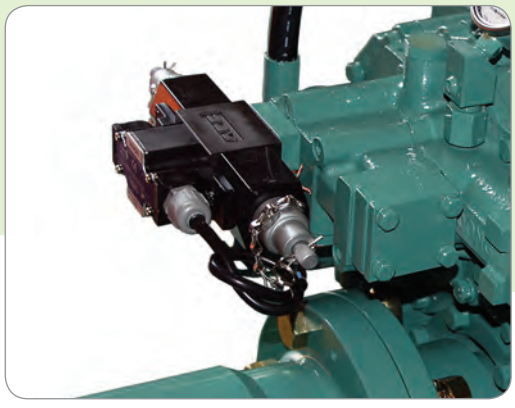

- Sustainable sailing by adopting urgency operating valve
- Compatible to all electronic engine control makers
- Safety with solenoid valve by global makers

ELECTRONIC CONTROL SYSTEM

FLEXBALL 4500 SERIES

The device allows to control the engine and marine gearbox on vessel in electronic or mechanical system.

ADVANTAGES

- It is possible to minimize the operating error of mechanical cable.
- The lever control is simple to operate and there is an overload warning system due to the safety device attached.

Electronic control lever (Dual, Single)

Single engine control

Twin engine control

SINGLE ENGINE ELECTRONIC LEVER GROUP

- Single Engine electronic lever group (Lever 1 + Actuator 1)

Item Number	Description
EL450100	Single engine electronic lever group

Single engine
Single station

- Single Engine electronic lever group (Lever 2 + Actuator 1)

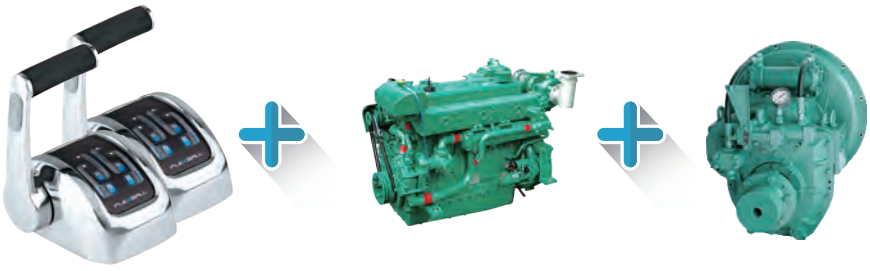

Item Number	Description
4500.C-100005	Single engine electronic lever
EL450100	Single engine electronic lever group
N-85E010003	Cable, data - (Y) Type
3500.32-10000	Cable, data (10M)*

* You can order additional data cables depending on the installation distance between the levers

Single engine
Dual station

TWIN ENGINE ELECTRONIC LEVER GROUP

■ Twin Engine electronic lever group (Lever 1 + Actuator 2)

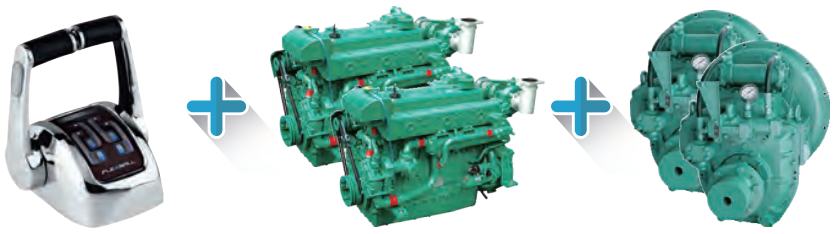

Twin engine
Single station

Item Number	Description
EL450200	Twin engine electronic lever group

■ Twin Engine electronic lever group (Lever 1 + Actuator 2)

Twin engine
Dual station

Item Number	Description
EL450200	Twin engine electronic lever group
EL450210	Twin engine electronic lever ass'y
N-85E010003	Cable, data - (Y) Type
3500.32-10000	Cable, data (10M)*

* You can order additional data cables depending on the installation distance between the levers

APPLICATIONS

Actuator

Lever at steering room

Actuator

FLEXIBLE COUPLING

REDUCE NOISE AND VIBRATION
11.5", 14" FLYWHEEL AVAILABLE

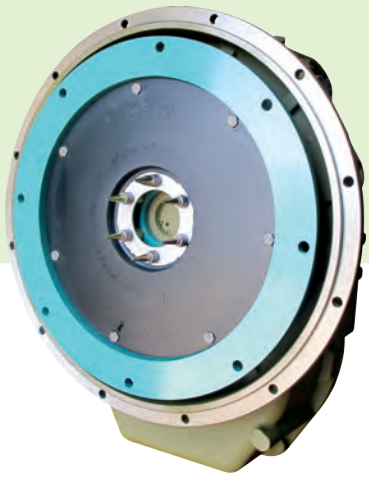

DUAL STAGE COUPLING

The Dual Stage Coupling has 2 kinds of rubber blocks to reduce noise and vibration in different RPM section. Inner blocks transmit power in low RPM section and outer blocks transmit power in high RPM (over 1,OOORPM) section

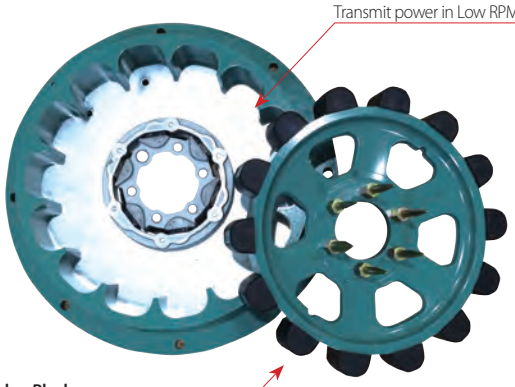

Factors of Angle Speed

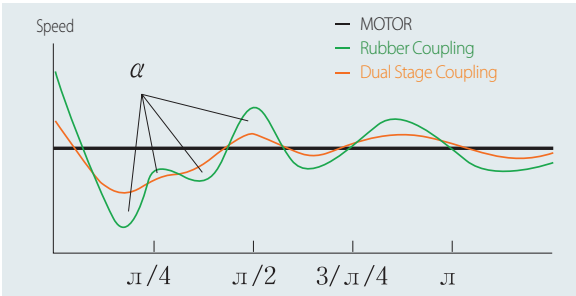

* DUAL STAGE RUBBER BLOCKS absorb the impacts & noises occurred from connecting parts.
* And they also decrease the vibrations following the engine explosion timing.

FLEXIBLE COUPLING

FREE STANDING TYPE

CENTAFLEX-R TYPE

The Flexible Coupling protects propulsion shaft system by reducing and absorbing vibration torques from engine operation and impact torque in clutch shifting.
With Torque Limit application, even when the rubber parts are damaged, emergency power transmissions are available.

SALES NETWORK

EXPORTING TO MORE THAN 60 COUNTRIES

- Europe : Turkey, UK, Netherlands, etc. 12 countries
- Middle East : U.A.E, Iran, etc. 16 countries
- Asia : Japan, China, Singapore, etc. 23 countries
- America & Others : Chile, Canada, etc. 9 countries

MARINE TRANSMISSION
STEERING SYSTEM
POWER TAKE OFF

13, Namgang-ro 1367beon-gil, Jinju-si, Gyeongsangnam-do, Republic of Korea (52781)
Tel: +82 55 760 5520 **Fax:** +82 55 760 5529
E-mail: dicl@d-i.co.kr **Website:** www.d-i.co.kr

[C1909NO1 DMT]

※ The contents described this catalogue may be modified without previous notice for performance improvement

ublication Copyright © 201909 by D-I