MARINE TRANSMISSION

DMT100IV

Standard Scope Of Supply

- Bell Housing (SAE 2, 3)
- Dual Stage Coupling(11.5")
- Propeller Coupling, Reamer Bolt
- Manual Control Valve
- Oil Cooler
- Cable Bracket

Options

- Manual Trolling Valve
- Electronic Control Valve(12V,24V)
- Manual Trolling Valve + Electronic Control Valve(12V, 24V)
- Mounting Bracket (Flat type, L type)

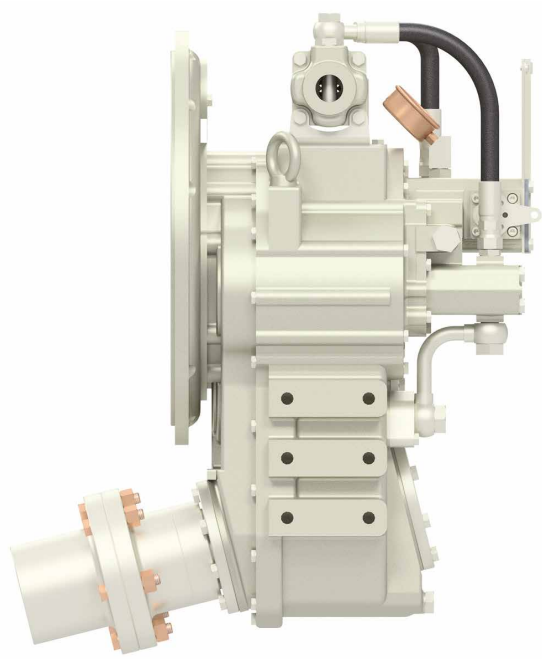

Model	Ratio	Max Input Torque		Capacity/RPM		Capacity/1800RPM		Max Input (RPM)	Bell Housing (SAE)	DRY WEIGHT (kg)
		(kgf.m)	(N.m)	kW	HP	kW	HP			
DMT100IV	1.21*, 1.54, 1.84, 2.12, 2.52	103	1011	0.105	0.141	190	225	4000	2, 3	148

*Special Order Ratio

※ The dry weight is the weight that excludes bell housing, coupling (rubber block, dual stage, Centa flexible) and propeller coupling from the standard scope of supply.

※ The capacity for classification may differ from the capacity on the table, please contact our sales team.

■ DMT100IV Dimensions

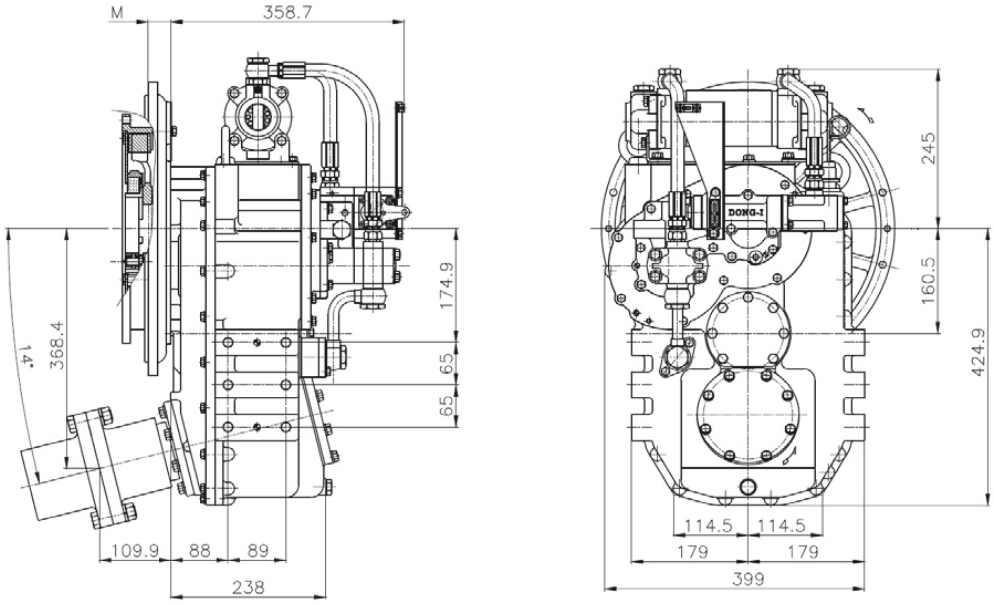

mm

Bell Housing Standard	Driving Ring	C	D	M(1)	M(2)	K
SAE#2	11.5"	447	325	35	-	25
SAE#3	11.5"	447	325	35	-	39

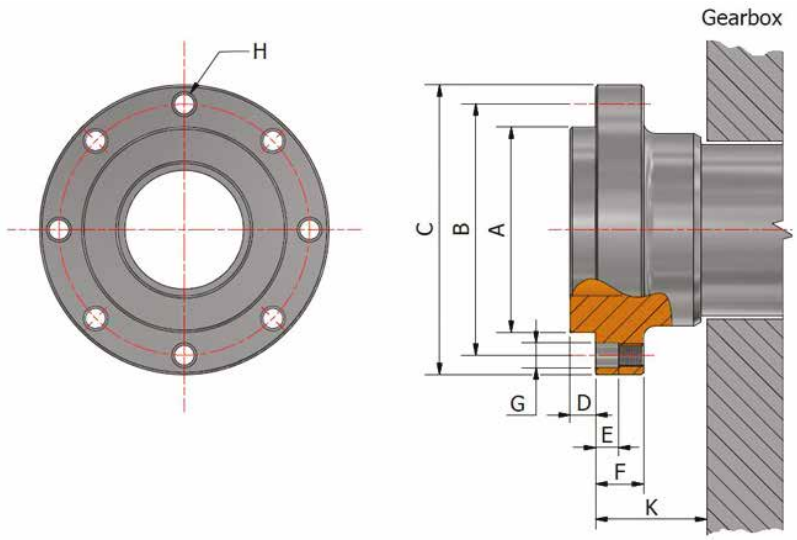

mm

A		B	C	D	E	F	G	H	K
Ø75	0 -0.02	Ø100	Ø118	5	10	20	Ø10.9	6-M10 P1.25	29.9

Copyright (C) D-I INDUSTRIAL CO., LTD. All rights reserved.
(52781) 13, Namgang-ro 1367 beon-gil, Jinju-si, Gyeongsangnam-do, Korea
TEL +82-55-760-5520 / FAX +82-55-760-5529 / Email : dicl@d-i.co.kr

[C2009A01N01E]