MARINE TRANSMISSION

DMTP6500

Standard Scope Of Supply

- Bell Housing (SAE 0, 1)
- Centa Flexible Coupling (18", 14")
- Propeller Coupling, Reamer Bolt
- Manual Control Valve
- Oil Cooler
- Cable Bracket
- Live PTO

Options

- Manual Trolling Valve
- Electronic Control Valve(12V,24V)
- Manual Trolling Valve + Electronic Control Valve(12V,24V)
- Mounting Bracket (Flat type, L type)
- Parts for Live PTO(Pump Pad, Coupling)

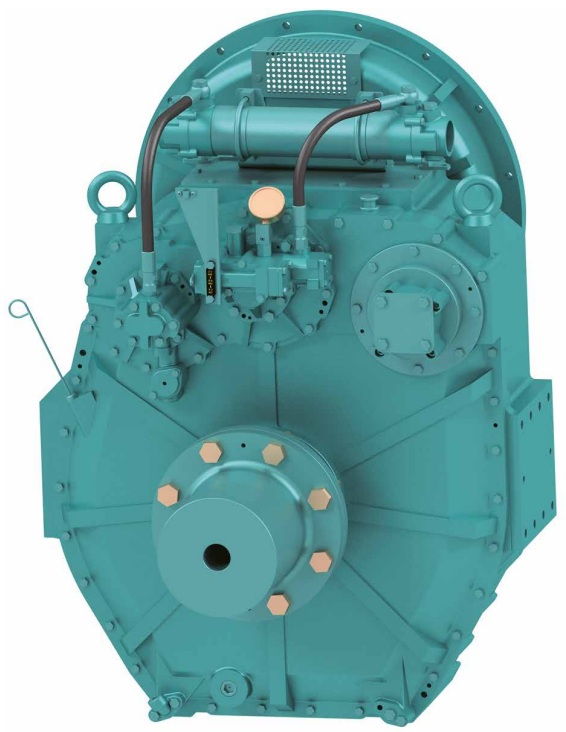

Model	Ratio	Max Input Torque		Capacity/RPM		Capacity/1800RPM		Max Input (RPM)	Bell Housing (SAE)	DRY WEIGHT (kg)
		(kgf.m)	(N.m)	kW	HP	kW	HP			
DMTP6500	5.11, 5.62*, 5.91	258	2530	0.264	0.355	476	639	2300	0, 1	834
	6.57*, 6.95	238	2334	0.244	0.328	440	590	2300		

*Special Order Ratio

※ The dry weight is the weight that excludes bell housing, coupling (rubber block, dual stage, Centa flexible) and propeller coupling from the standard scope of supply.

※ The capacity for classification may differ from the capacity on the table, please contact our sales team.

■ DMTP6500 Dimensions

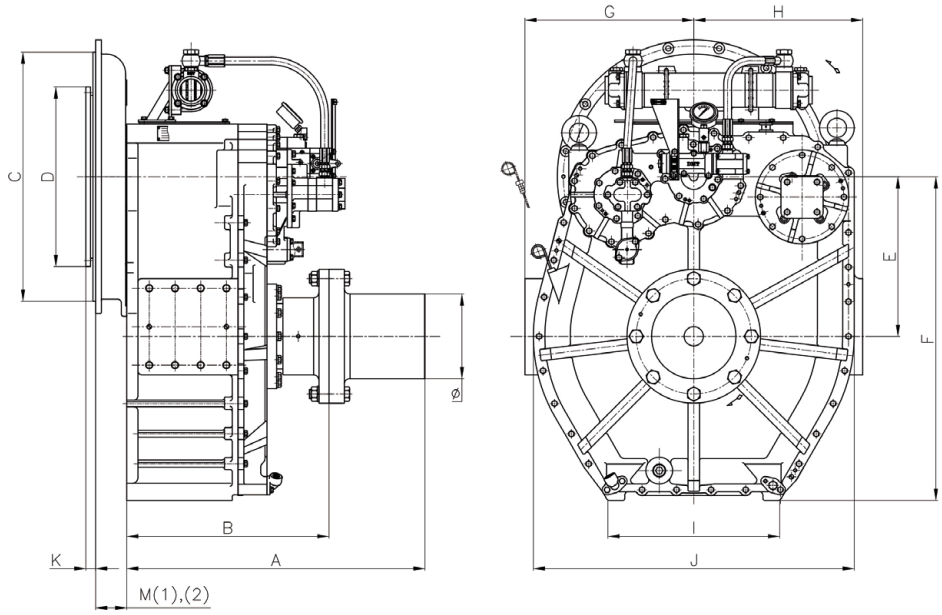

mm

A	B	E	F	G	H	I	J	Ø
777	527	415	842	440	440	448	756	220

mm

Bell Housing Standard	Driving Ring	C	D	M(1)	M(2)	K
SAE#0	18"	647	571	-	130	15
SAE#0	14"	647	466	-	130	25
SAE#1	14"	511	466	-	122	25

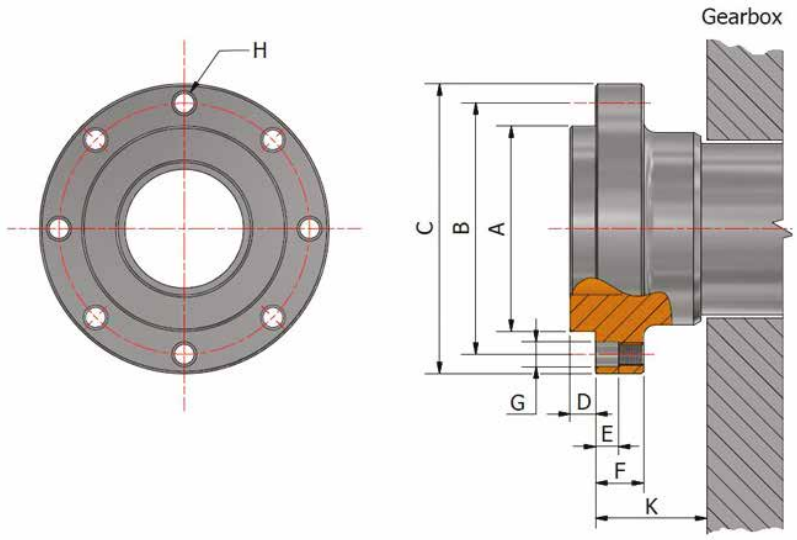

mm

A		B	C	D	E	F	G	H	K
Ø129	0 -0.02	Ø155	Ø177	10.6	11	25	Ø12.55	8-M12 P1.25	35.7

Copyright (C) D-I INDUSTRIAL CO., LTD. All rights reserved.
(52781) 13, Namgang-ro 1367 beon-gil, Jinju-si, Gyeongsangnam-do, Korea
TEL +82-55-760-5520 / FAX +82-55-760-5529 / Email : dicl@d-i.co.kr

[C2009A01N01E]