20WT50 - 20CT50 - 20ST50
23WT60 - 23CT60 - 23ST60

3 Phase Diesel

MARINE GENERATOR

Q2400 Series

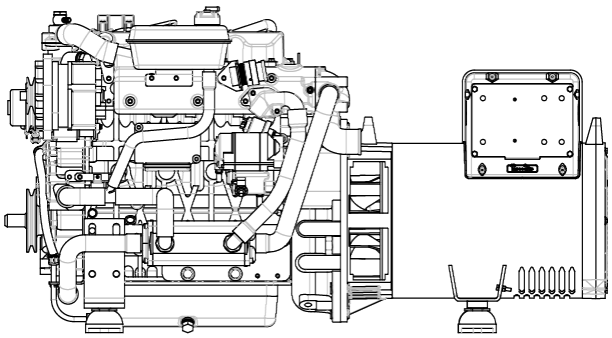

GENSET WEIGHT & DIMENSIONS

	Without	With Soundshield
Weight, kg [lbs]	405 [892]	450 [992]
Length, mm [in.]	1200 [47,25"]	1300 [51,18"]
Width, mm [in.]	540 [21,25"]	600 [23,62"]
Height, mm [in.]	650 [25,59"]	700 [27,55"]

GENERATOR RATINGS

Genset	Volts	Phase	Amps	kW/kVA prp	kW/kVA ltp
20WT50	120-208-416	3	27,4	19/23,7	19,8/24,7
20CT50	120-208-416	3	27,4	19/23,7	19,8/24,7
20ST50	120-208-416	3	27,4	19/23,7	19,8/24,7
23WT60	120-240	3	74	21,8/27,2	22,2/27,7
23CT60	120-240	3	74	21,8/27,2	22,2/27,7
23ST60	120-240	3	74	21,8/27,2	22,2/27,7

PRP = Prime Running Power
LTP = Limited Time Power

Engine features

- Kubota engine Base
- Cast-iron motor block
- Diesel engine 4 strokes, 4 cylinders 2434 cm3
- Pinion gear distribution
- Indirect mechanical injection
- Automatic preheating system
- Electronic speed regulator

Generator features

- Alternator Mecc Alte
- 4 poles
- Protection class: IP23
- Insulation class : H
- Voltage regulation: +/- 1 %

SI-2 Digital Control panel

- Start & stop buttons
- Illustrated menu
- Display and management of engine parameters
- Displaying and managing of generator parameters
- Generator status indicator
- Display of alerts and fault codes
- History log (150 records)
- 5 languages available
- Dimensions : 172 x 112 mm.

Standard equipement

- Unipolar 12 V Electric System
- Wet exhaust
- Heat exchanger
- Raw water pump with Neoprene rotor
- Safeguards on the main parameters

Optional Equipement

- Siphon breaker
- Fuel pre-filter
- Bipolar electrical system
- 24V Electrical system

ISO 9001 BUREAU VERITAS Certification

MARINE GENERATOR

ENGINE GENERAL DATA

Air intake:	Natural
Compression ratio:	22,3 :1
Valves per cylinder:	2
Firing order:	1-3-4-2
Rotational direction flywheel side:	CCW
Rated speed rpm:	1500 [50Hz] 1800 [60Hz]
Fuel injection pump:	Type Bosch MD Mini
Governor type:	Electronic
minimal oil pressure at rated speed:	300 kpa
Engine operating angle:	20° Continuous

ENGINE COOLING SYSTEM

Seawater pump:	Bronze, Neoprene rotor
Seawater pump flow:	50 Hz: 40l/min-10,57 gal/min 60 Hz: 48l/min-12,68 gal/min
Coolant pump type:	Belt-driven centrifugal pump
Exhaust manifold:	Fresh water cooled
Max exhaust gas temperature:	550°C

AIR INTAKE SYSTEM

Engine air flow:	50 Hz:1,83 m^3/min 60 Hz: 2,19m^3/min	64,6 ft^3/min 77,3 ft^3/min

ENGINE ELECTRICAL SYSTEM

Battery recommended:	88 A/h
Electrical Starter Motor:	12 V/1,4 kW
Command Panel provided:	SI-2

ALTERNATOR GENERAL CHARACTERISTICS

Brand:	Meccalte
Model:	ECP28 VL4C (50Hz) ECP28 VL4C (60Hz)
Insulation Class:	H
Frequency:	50Hz / 60Hz
Standard protection:	IP23
Voltage regulation:	+/- 1%

FUEL CONSUMPTION vs. LOAD [l/h]

Load	25 %	50 %	75 %	100 %	110 %
50 Hz	1,53	3,05	4,58	6,1	6,7
60 Hz	1,82	3,65	5,46	7,29	8

FUEL CONSUMPTION vs. LOAD [U.S G/h]

Load	25 %	50 %	75 %	100 %	110 %
50 Hz	0,41	0,81	1,21	1,61	1,77
60 Hz	0,48	0,97	1,45	1,93	2,12

POWER CLASS According to ISO 8528-1.

Limited **T**ime **P**ower - Limited number of hours is of 500hrs per year. Non-Variable Load. Applications not to exceed 100 % of the Prime Power rating (no overload is allowed).

Prime **R**unning **P**ower - Unrestricted running time. Time at full load ≤ 500hrs/year. Load variation ≤ 75 % of rated power. 10 % overload is allowed for1hr every 12hrs.

SHORE POWER 60Hz-ONE PHASE

Complying with Ocean Going Vessels, the outputs of the NANNI Gensets are in accordance with the Shore Power 101 at disposal on U.S marina docks, (and *associated waters, Carribean, Pacific and other countries such as N.Z)*.

Under this scheme, output delivered by Gensets is “Split Phase” 120/240 V-60 Hz [L1-N-L2]. The One Phase NANNI Genset range is set on this basis. Need for 120 V-60Hz/one phase-2 wires [L-N] voltage, must be forwarded to NANNI prior to placing an order. This paragraph does not apply to Star/Delta Gensets.

MARINE GENERATOR

ADVANCED SI-2 DIGITAL CONTROL PANEL

- Genset controller for stand-by and prime-power
- All-in-one intuitive & powerful PC tool for configuration/ monitoring/control, locally or remotely
- Easy to install, configure and use

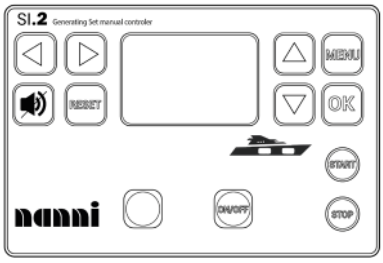

KEY FUNCTIONS AND PROTECTIONS

- Stand-by and prime-power application in one unit
- Backlit symbols
- Inbuild RS485
- RTC with battery back-up (full calendar)
- Zero power mode
- True RMS measurement
- Detailed history log with up to 350 records
- Dual Mutual Standby application support
- Remote display
- User setpoints and protections
- 5 languages in the controller & Translator functionality
- User Access Management
- Ready for alternative configurations

POWER SUPPLY & OPERATING CONDITIONS

- Power supply range: 8-36 V D.C
- Power consumption: 2.5W
- RTC Battery: 3 Volts replaceable
- E-Stop Fusing: 10 A
- Max Power Dissipation: 7W
- Protection degree: IP 65
- Operating temperature: -20 to + 70°C
- Operative humidity: 95 % non-condensing [EN 60068-2-30]
- Dash board foot-print: 172 x 112 mm.

ACCESSORIES

Soundshield enclosure

Designed for highly effective soundproofing, for an easy access of internal components maintenance or servicing. Brings lower service in maintaining components tidy at all times. Enclosure body is robust and is ensuring yet best safety available. Side connection panel includes connections for the following items:

- Battery (positive and negative)
- Ground binding post
- Fuel inlet and return lines
- Seawater inlet
- Water-cooled exhaust outlet
- Wiring power outlet easy access
- Circuit-breaker on front
- Digital control panel surface mounted
- Emergency switch
- Easy to open cover panels by levers.

Siphon break

- Siphon break is mandatory on Gensets installed below the vessel waterline. This device prevents direct siphoning of seawater into the engine via exhaust line.
- To this, provision is made at the bottom of the genset to fit inlet and outlet hoses lines.

Output power protection

- A heavy duty circuit breaker [C.E & U.L approved], protects the generator against extreme and adverse external overloads.

Fuel prefilter

- Fuel pre-filter and/or fuel-water separators are highly recommended in view to avoid consequences of depleted or not complying fuel.
- Depending of requirements and needs, do not hesitate to consult the Nanni Catalog of Accessories to find the best suited prefilter or water-fuel separator.

Raw water system

- A sturdy sea water filter prevents debris from entering the cooling system and to cause damage to your Genset cooling system.
- Do not hesitate to consult the Nanni Catalog of Accessories to find the best suited raw water system to ensure long life trouble free to your equipment.

MARINE GENERATOR

STANDALONE DIMENSIONS

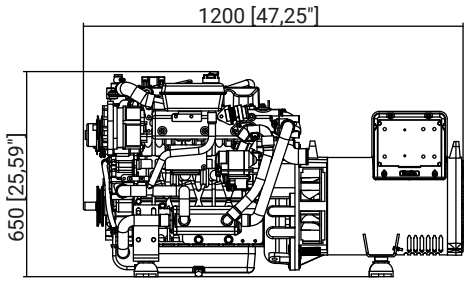

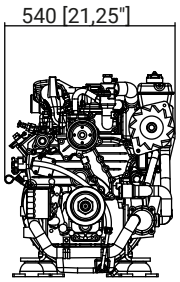

SOUNDPROOF DIMENSIONS

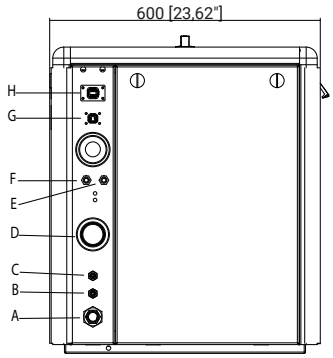

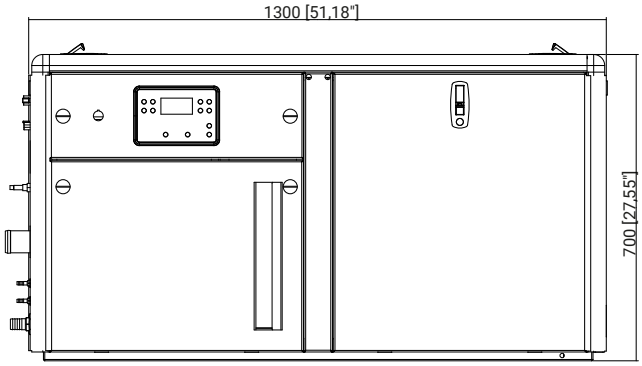

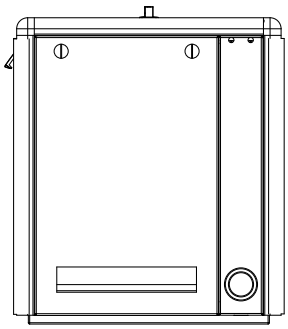

GENSET CONNECTIONS

A	Raw water inlet line Int diam:	mm [in]	25 [1”]
B-C	Min Fuel line Int diam:	mm [in]	8 [0.31”]
D	Exhaust connexion:	mm [in]	75 [3”]
E-F	Battery connexion		
G-H	Electrical connector		
	Fuel Std pump max suction lift:	m [in]	0,5 [19,68"]
	Fuel Eletric pump max suction lift:	m [in]	1,8 [70,9"]

NOTE 1: Dimensions are shown in mm & [in.].

NOTE 2: This drawing is for reference only. Please do not use as installation planning. Refer to your nearest NANNI local distributor for more detailed information.

AUTHORIZED DEALER

Technical data according to ISO 8528-1. This document is not contractual. Nanni reserves the right to modify any of the characteristics stated in this document without notice, in a constant effort to improve the quality of its products. Images and illustrations may shown non standard equipements. All combination of equipment & accessory are not available.

DGBXXC01185

NANNI INDUSTRIES S.A.S.
11, Avenue Abbé Mariotte
33260 La Teste - France
Tel +33 (0)5 56 22 30 60
www.nannienergy.com

NANNI SRL
Via degli Olmetti, 44/A
00060 Formello - Roma - Italia
Tel +39 06 30 88 42 51
www.nannienergy.com