Doosan Infracore

Industrial Engine

D10

Intermittent rating kW(HP) / rpm	Max. torque N.m(kg.m) / rpm	EU Compliance
17.9(24) / 3000	61(6.2) / 2300	Stage V
16.4(22) / 3000	54(5.5) / 2300	
16.4(22) / 2800	65(6.6) / 1900	

CERTIFIED STAGE V

◈ General Engine Data

• Engine Model	SM10-MFP
• Engine Type	In-line 3 cycle Diesel,
	water cooled, Natural Aspirated
• Combustion type	Direct injection
• Cylinder type	Linerless
• Number of cylinders	3
• Bore x Stroke	75 x 76 mm
• Displacement	1.007 liter
• Compression ratio	21.0 : 1
• Firing order	1 - 2 - 3
• Dry weight	101 kg (with Fan)
• Dimension (LxWxH)	546 x 485 x 544 mm
• Rotation	Counter clockwise viewed from Flywheel
• Flywheel housing	SAE #5
• Flywheel	Clutch 7 ½" (SAE J620)
• Number of teeth	98

◈ Fuel System

• Injection pump	Bosch K-type mini Pump
• Governor	Mechnical centrifugal
• Feed pump	Diaphragm type Pump
• Injection nozzle	Throttle type
• Fuel filter	Full flow, cartridge type
• Used fuel	Diesel fuel oil

◈ Lubrication System

• Lub. Method	Fully forced pressure feed type
• Oil pump	Gear type driven by crankshaft
• Oil filter	Full flow, cartridge type
• Oil capacity	Max. 3.2 liters
• Angularity limit	30 deg all around
• Lubrication oil	10W-30/40(API CD)
• Maximum oil temp	121 ℃ at main oil gallery
• Lub oil pressure	Idle Speed : Min 70 kPa
	Governed Speed : Min 245 kPa

◈ Engineering Data

• Water flow	45 liters/min @2,800 rpm (22HP)
• Heat rejection	
- to coolant	4.7 kcal/sec @2,800 rpm (22HP)
• Exhaust gas temp	550 °C↓ @2,800 rpm
• Max. permission restrictions	
- Intake system	2.45 kPa clean filter
	5.88 kPa dirty filter
- Exhaust system	6.87 kPa max.

◈ Cooling System

• Cooling method	Fresh water forced circulation
• Water capacity	1.6 liter
(engine only)	
• Water pump	Centrifugal type driven by belt
• Thermostat	Wax – pellet type
	Opening temp. 82°C
	Full open temp. 95°C
• Cooling fan	Suction type, Plyproplene (Ø315)

◈ Valve System

• Type	Overhead valve type	
• Number of valve	Intake 1, exhaust 1 per cylinder	
• Valve lashes at cold	Intake 0.15mm, Exhaust 0.15mm	
• Valve timing	Open	Close
- Intake valve	8 deg. BTDC	38 deg. ABDC
- Exhaust valve	44 deg. BBDC	8 deg. ATDC

◈ Electrical System

• Battery Charging Alternator	12V x 75A
• Voltage regulator	Built-in type IC regulator
• Starting motor	12V x 1.7kW
• Battery voltage	12V
• Battery capacity	64 Ah (recommended)
• Starting Aid	Glow plug

◈ Performance Curve

Output : Gross Intermittent SAE J1995

17.9 kW (24HP) @3000

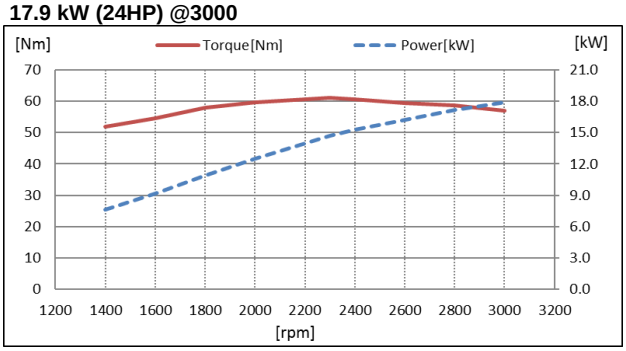

	Power			Torque	
speed	kW	PS	HP	Nm	kgm
1400	7.6	10.4	10.2	52.0	5.3
1600	9.1	12.4	12.2	54.5	5.6
1800	10.9	14.9	14.7	58.0	5.9
2000	12.5	17.0	16.8	59.7	6.1
2200	14.0	19.0	18.7	60.7	6.2
2300	14.7	20.0	19.7	61.0	6.2
2400	15.3	20.7	20.5	60.7	6.2
2600	16.2	22.0	21.7	59.5	6.1
2800	17.2	23.4	23.0	58.6	6.0
3000	17.9	24.3	24.0	57.0	5.8

16.4 kW (22HP) @3000

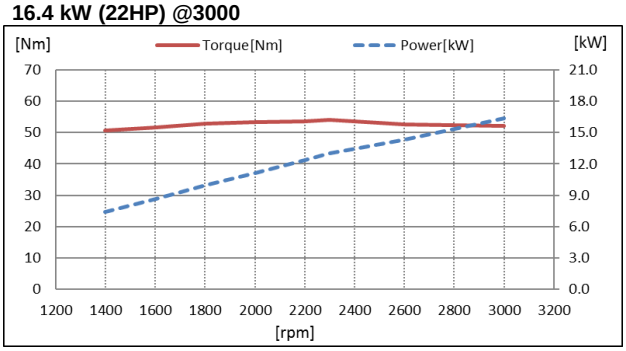

	Power			Torque	
speed	kW	PS	HP	Nm	kgm
1400	7.4	10.1	9.9	50.6	5.2
1600	8.7	11.8	11.6	51.7	5.3
1800	10.0	13.6	13.4	52.9	5.4
2000	11.2	15.2	15.0	53.3	5.4
2200	12.4	16.8	16.6	53.7	5.5
2300	13.0	17.7	17.4	54.0	5.5
2400	13.4	18.3	18.0	53.5	5.5
2600	14.3	19.5	19.2	52.7	5.4
2800	15.4	20.9	20.6	52.4	5.3
3000	16.4	22.3	22.0	52.2	5.3

◈ Engine Dimension

• Dimension (L×W×H) 546 × 496 × 544 mm

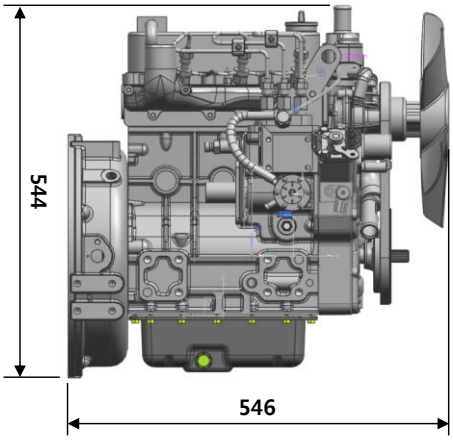

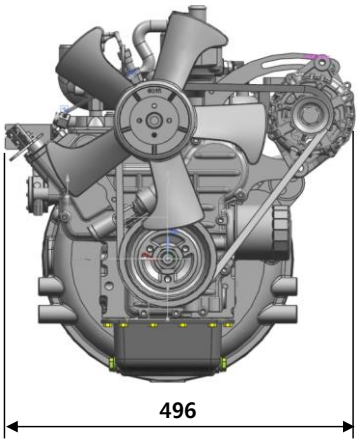

◈ Conversion Table

in. = mm x 0.0394	hp = PS x 0.98635	kW = 0.2388 kcal/s
PS = kW x 1.3596	lb = kg x 2.20462	lb/PS.h = g/kW.h x 0.00162
psi = kg/cm2 x 14.2233	lb/ft = N.m x 0.737	cfm = m3/min x 35.336
in3 = lit. x 61.02	U.S. gal = lit. x 0.264	

Doosan Infracore Co., Ltd.
28th Floor, Doosan Tower, 275, Jangchungdan-ro, Jung-gu, Seoul, Republic of Korea (04563)
Tel : +82 2 3398 8893 / Fax : +82 2 3398 8898
E-mail : enginesales@doosan.com
Website : www.doosaninfracore.com

※Specifications are subject to change without prior notice.