DOOSAN INFRACORE GENERATOR ENGINE

P222FE

Ratings (kWm/PS)	Gross Engine Output		Net Engine Output	
	Standby	Prime	Standby	Prime
1500rpm(50Hz)	612/832	569/774	589/801	546/743
1800rpm(60Hz)	711/967	659/896	673/915	621/844

Ratings Definitions

The power ratings of Emergency Standby and Prime are in accordance with ISO 8528.
Fuel Stop power in accordance with ISO 3046.
Electric power (kWe) must be considered cooling fan loss, alternator efficiency, altitude derating and ambient temperature.

STANDBY POWER RATING is applicable for supplying emergency power for the duration of the utility power outage. No overload capability is available for this rating. A standby rated engine should be sized for a maximum of an 70% average load factor and 200 hours of operation per year. This includes less than 25 hours per year at the Standby Power rating.

PRIME POWER RATING is available for an unlimited number of hours per year in variable load application. Variable load should not exceed a 70% average of the Prime Power rating during any operating period of 24 hours. The Total operating time at 100% Prime Power shall not exceed 500 hours per year. A 10% overload capability is available for a period of 1 hour withing a 12 hour period of operation. Total operating time at the 10% overload power shall not exceed 25 hours per year.

◎ GENERAL ENGINE DATA

○ Engine Model	P222FE
○ Engine Type	4-Cycle, V-type, 12-Cylinder, Turbo charged & intercooled (air to air)
○ Bore x stroke	128 x 142 mm
○ Displacement	21.927 liters
○ Compression ratio	14.2 : 1
○ Rotation	Counter clockwise viewed from Flywheel
○ Firing order	1-12-5-8-3-10-6-7-2-11-4-9
○ Injection timing	9˚±1˚ BTDC (50Hz) / 12˚±1˚ BTDC (60Hz)
○ Dry weight	1,650 kg(with Fan)
○ Dimension (LxWxH)	1,698 x 1,389 x 1,281 mm (50Hz)
	1,700 x 1,389 x 1,283 mm (60Hz)
○ Fly wheel housing	SAE NO.1M
○ Fly wheel	Clutch NO.14M
○ Number of teeth on flywheel	160

◎ ENGINE MOUNTING

Maximum Bending Moment at Rear Face to Block	1,325 N.m

◎ EXHAUST SYSTEM

Maximum Back Pressure	5.9 kPa

◎ AIR INDUCTION SYSTEM

Maximum Intake Air Restriction	
. With Clean Filter Element	2.16 kPa
. With Dirty Filter Element	6.23 kPa
○ Max. static pressure after Radiator	0.125 kPa

Printed in September 2015 Large Engine Design Team_P222FE_F

◎ COOLING SYSTEM

Water circulation by centrifugal pump on engine.

○ Cooling method	Fresh water forced circulation
○ Coolant capacity	Engine Only : Approx. 23 lit, With Radiator(standard) : Approx 88 lit.
○ Coolant flow rate	600 liters / min
○ Pressure Cap	49 kPa
○ Water Temperature	
- Maximum for standby and Prime	103℃
- Before start of full load	40.0℃
○ Water pump	Centrifugal type driven by belt
○ Thermostat Type and Range	Wax – pellet type, Opening temp. 71°C , Full open temp. 85°C
○ Cooling fan	Blower type, plastic , 915 mm diameter, 9 blade
○ Max. external coolant system restriction	Not available

◎ LUBRICATION SYSTEM

Force-feed lubrication by gear pump, lubricating oil cooling in cooling water circuit of engine.

○ Lub. Method	Fully forced pressure feed type
○ Oil pump	Gear type driven by crank-shaft gear
○ Oil filter	Full flow, cartridge type
○ Oil capacity	Max. 40 liters , Min. 33 liters
○ Lub oil pressure	Idle Speed : Min 100 kPa
	Governed Speed : Min 250 kPa
○ Maximum oil temperature	120℃
○ Angularity limit	Front down 10 deg , Front up 10 deg , Side to side 22.5 deg
○ Lubrication oil	Refer to Operation Manual

◎ FUEL SYSTEM

Bosch type in-line pump with integrated, electromagnetic actuator.

○ Injection pump	Bosch in-line "P" type
○ Governor	Electric type
○ Speed drop	G2 Class (ISO 8528)
○ Feed pump	Mechanical type in injection pump
○ Injection nozzle	Multi hole type
○ Opening pressure	27.9 MPa
○ Fuel filter	Full flow, cartridge type with water drain valve
○ Maximum fuel inlet restriction	10 kPa
○ Maximum fuel return restriction	60 kPa
○ Fuel feed pump Capacity	630 liters / hr
○ Used fuel	Diesel fuel oil

◎ ELECTRICAL SYSTEM

○ Battery Charging Alternator	28.5V x 45A alternator
○ Voltage regulator	Built-in type IC regulator
○ Starting motor	24V x 7.0 kW
○ Battery Voltage	24V
○ Battery Capacity	2 x 200 Ah (recommended)
○ Starting aid (Option)	Block heater, Air Heater

◎ VALVE SYSTEM

○ Type	Overhead valve type	
○ Number of valve	Intake 2, exhaust 2 per cylinder	
○ Valve lashes at cold	Intake 0.4 mm , Exhaust 0.5 mm	
○ Valve timing		
	Opening	Close
-. Intake valve	24 deg. BTDC	30 deg. ABDC
-. Exhaust valve	59 deg. BBDC	21 deg. ATDC

◎ PERFORMANCE DATA

		Prime Power		Standby Power	
○ Governed Engine speed	rpm	1500	1800	1500	1800
○ Engine Idle Speed	rpm	800	800	800	800
○ Over speed limit	rpm	1650	1980	1650	1980
○ Gross Engine Power Output	kW	569	659	612	711
	PS	774	896	832	967
○ Break Mean effective pressure	MPa	2.08	2.00	2.23	2.16
○ Mean Piston Speed	m/s	7.1	8.5	7.1	8.5
○ Friction Power	kW	32	44	32	44
	PS	43.5	59.8	43.5	59.8
○ Specific fuel consumption					
25% load	liters/hr	38.0	46.4	40.6	49.2
50% load	liters/hr	73.5	85.5	78.7	92.4
75% load	liters/hr	109.8	127.6	118.8	137.8
100% load	liters/hr	148.5	175.1	160.4	191.7
○ Fan Power	kW	23	38	23	38
○ Sound Pressure at 1m from the each side of Cylinder Block					
(without Fan)	dB(A)	101.5	103.4	101.5	103.4

The all data and the specific fuel consumption are based on ISO 3046/1, Standard reference conditions are in accordance with 298 K(25° Celsius) air temperature, 100kPa(1000mbar) air pressure, 60% relative humidity, 110m(361ft) altitude.

Operation At Elevated Temperature And Altitude: The engine may be operated at :

1800 rpm & 1500rpm up to 750~ 1000m and 30°C without power deration

For sustained operation above these conditions, derate by 3% per 304m , and 2% per 11 °C

Engine Data with Dry Type Exhaust Manifold

○ Intake Air Flow	m3/min	37.8	48.5	40.2	51.5
○ Exhaust gas temp. after turbo.	°C	536	516	630	600
○ Exhaust Gas Flow	m3/min	106.7	133	126.7	156.5
○ Heat Rejection to Exhaust	kW	523.3	617.0	565.2	675.5
○ Heat Rejection to Coolant	kW	227.5	268.3	245.8	293.7
○ Heat Rejetion to Intercooler	kW	121.3	143.1	131.1	156.6
○ Radiated Heat to Ambient	kW	53.1	62.6	57.3	68.5
○ Cooling water circulation	liters/min	645	720	645	720
○ Cooling fan air flow	m3/min	606	702	606	702

◆ ENGINE DIMENSION

[50Hz]

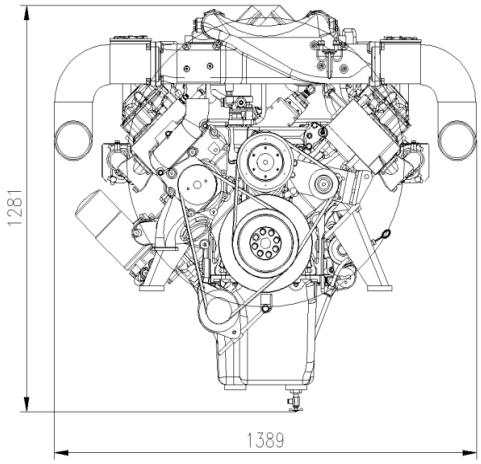

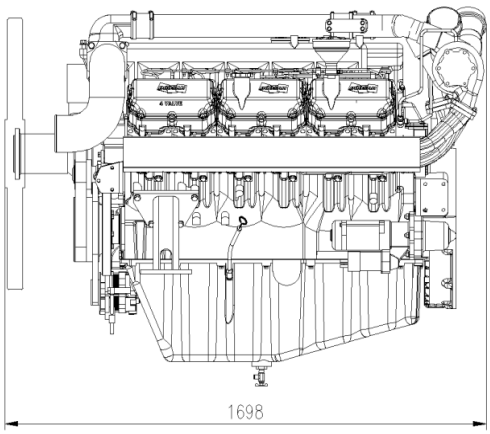

[60Hz]

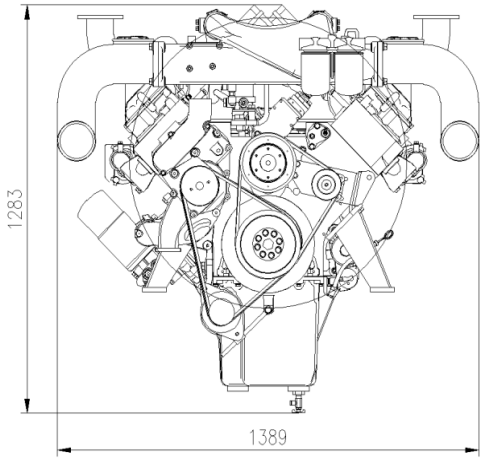

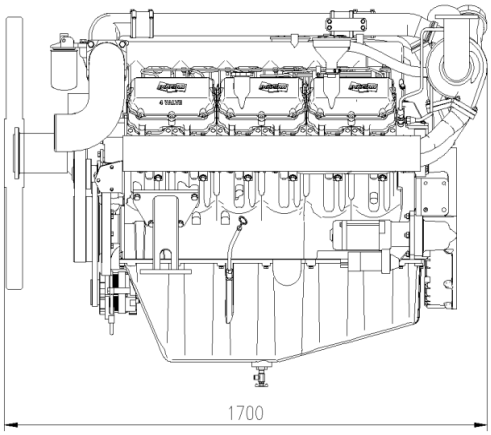

◆ CONVERSION TABLE

in. = mm x 0.0394
PS = kW x 1.3596
psi = kg/cm2 x 14.2233
in3 = lit. x 61.02
hp = PS x 0.98635
lb = kg x 2.20462
kW = kcal/sec x 0.239

lb/ft = N.m x 0.737
U.S. gal = lit. x 0.264
kW = 0.2388 kcal/s
lb/PS.h = g/kW.h x 0.00162
cfm = m^3/min x 35.336
MPa = kPa x 1000 = bar x 10

Doosan Infracore Co., Ltd.
21st Floor, Doosan Tower, 18-12, Euljiro 6-ga,
Jung-gu, Seoul, Korea.

TEL : +82-2-3398-8400 / FAX : +82-2-3398-8509
E-mail : enginesales@doosan.com
Web site : www.doosaninfracore.com

※ Specifications are subject to change without prior notice.

Printed in September 2015 Large Engine Design Team_P222FE_F