HYUNDAI

DP086CB

GENERATOR

7.5L / 6 CYLINDERS

50/60Hz Multi Frequency Generator

SWITCHABLE

DESCRIPTION

- HD Hyundai Infracore introduced new generator electronic engines DP086C- Series.
- When compared to other engines of equivalent capacity, it displays a higher output, better fuel efficiency, higher safety, and easier maintenance.
- Achieving precise fuel delivery with common rail system and electronic control unit(ECU), it allows optimal injection timing and pressure based on engine's current operating conditions.

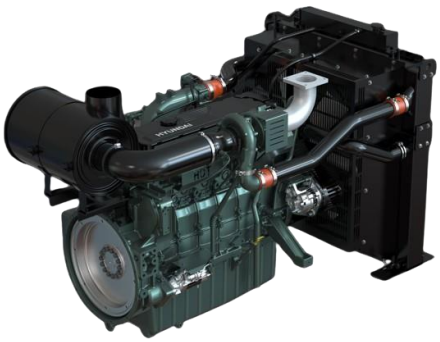

FEATURES & BENEFITS

[High Performance & Durability]

- G3 Class(ISO 8528-5)
- HVO/GTL : Usable up to 100%
- Robust main structure parts
- Oil maintenance interval: 1,000hrs without replenishment
- Operates without power derating up to an altitude of 1,000 meters
- Longer warranty period through strict verification

[Convenience & Safety]

- 50/60 Hz switchable
- Maintenance free through auto tensioning belt drive system
- Cold Startability@-25℃ without supplementary device
- Radiator to cover a wide range of usage condition
- Safety guard for hazard parts
- Meet REACH & RoHS regulations

OUTPUT

1,500 RPM (50Hz)									1,800 RPM (60Hz)								
Standby			Prime/DCP			Continuous			Standby			Prime/DCP			Continuous		
kWm	kWe	kVA	kWm	kWe	kVA	kWm	kWe	kVA	kWm	kWe	kVA	kWm	kWe	kVA	kWm	kWe	kVA
225	205	256	205	186	233	144	129	161	260	234	293	236	211	264	165	145	181

- Generator efficiency (typical) : 93.5%
- kWm= kilo Watt mechanical, Gross power; kWe= kilo Watt electric = (kWm-Fan loss) x Generator eff.; kVA= kilo Volt Ampere
- Calculations based on a 0.8 power factor = kWe/0.8

DP086CB

GENERAL DATA

Type	Diesel, Water cooled, Turbo charged & Intercooled
Bore	110mm
Stroke	132mm
Displacement liter	7.5 liter
Cylinders and Arrangement	Cast iron, 6 Cylinder, In-line
Battery charging alternator	24V x 45A
Starting voltage	24V
Fuel system	Common rail, Direct injection controlled by ECU
Fuel filter	Full flow, Cartridge type
Lube oil filter type (s)	Full flow, Cartridge type
Lube oil capacity (l)	Max. 35 liters , Min. 18 liters
Flywheel dimensions	SAE NO.1M / Clutch NO.14”

COOLING SYSTEM

Cooling method		Fresh water forced circulation
Cooling ratio		50% ethylene glycol; 50% water
Water capacity (L)	**with radiator**	42 liters
	without radiator	18.0 liters
Fan power (kW)		6.5 kW (1,500 rpm), 11.0 kW (1,800 rpm)
Cooling system air flow (㎥/min)		270 ㎥/min (1,500 rpm), 330 ㎥/min (1,800 rpm)

FUEL CONSUMPTION

1,500 RPM (50Hz)		
%	kWm	Liters/hr
Standby		
100	225.0	51.8
Prime		
100	205.0	46.8
75	153.8	35.3
50	102.5	24.2
25	51.3	13.3
Continuous		
100	144.0	33.2

1,800 RPM (60Hz)		
%	kWm	Liters/hr
Standby		
100	260.0	61.4
Prime		
100	236.0	54.9
75	177.0	41.3
50	118.0	28.7
25	59.0	16.0
Continuous		
100	165.0	38.7

DP086CB

DIMENSIONS

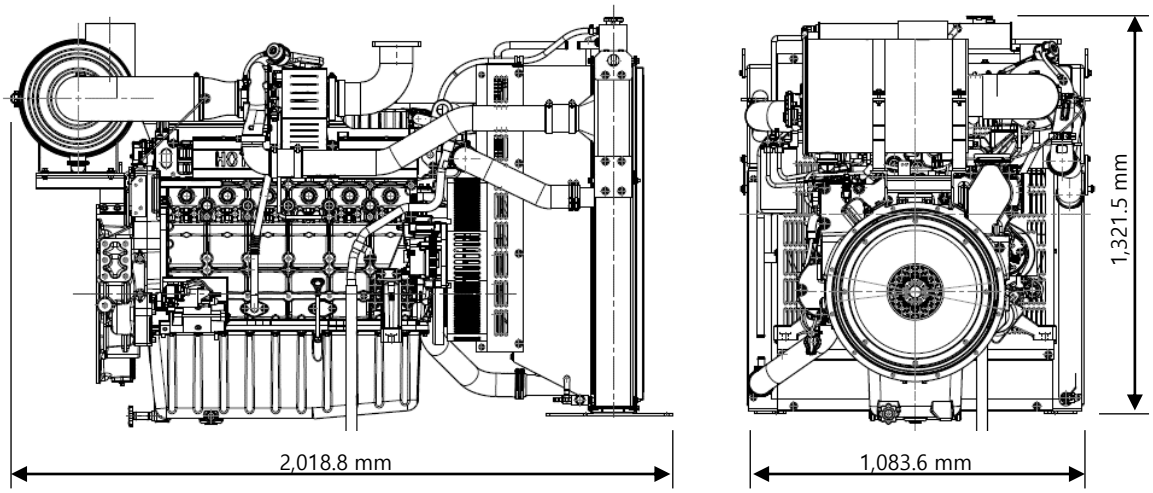

Weights and Dimensions (G-Pack)			
Length (mm)	**Width (mm)**	**Height (mm)**	**Dry Weight (kg)**
2,018.8	1,083.6	1,321.5	820

POWER RATING GUIDE

The power ratings of Emergency Standby and Prime are in accordance with ISO 8528. Fuel Stop power in accordance with ISO 3046. Electric power (kWe) must be considered cooling fan loss, alternator efficiency, altitude derating and ambient temperature.

ESP(STANDBY POWER) is applicable for supplying emergency power for the duration of the utility power outage. No overload capability is available for this rating. A standby rated engine should be sized for a maximum of an 70% average load factor and 200 hours of operation per year. This includes less than 25 hours per year at the Standby Power rating.

PRP(PRIME POWER) is available for an unlimited number of hours per year in variable load application. Variable load should not exceed a 70% average of the Prime Power rating during any operating period of 24 hours. The Total operating time at 100% Prime Power shall not exceed 500 hours per year. A 10% overload capability is available for a period of 1 hour within a 12 hours period of operation. Total operating time at the 10% overload power shall not exceed 25 hours per year.

COP(CONTINUOUS POWER) is defined as being the maximum power which the generating set is capable of delivering continuously whilst supplying a constant electrical load when operated for an unlimited number of hours per year under the agreed operating conditions with the maintenance intervals and procedures being carried out as prescribed by the manufacturer.

DCP(DATA CENTRE POWER) is available for variable or continuous electrical loads in a data centre application. Up to 100 percent load factor is permitted for unlimited time. DCP power definition relies on ISO 8528-1 2018 standard to be followed by generator set manufacturer, and will support Tier I to Tier IV classifications of data centres as per UPTIME institute guidelines. This definition is only back up a reliable utility. Continuous operation at load is available as after approval of Engine manufacturer (HDI).

※ Specifications are subject to change without prior notice.

HD Hyundai Infracore Co., Ltd.
13F, HD Hyundai Group's Global R&D Center, 477, Bundangsuseo-ro, Bundang-gu, Seongnam-si, Gyeonggi-do, Korea (13553)
T.+82-32-211-1114 / enginesales@hd.com / www.hd-hyundaiengine.com