IS 36

CONTROL PANEL

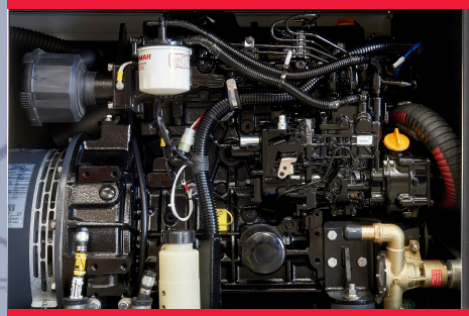

YANMAR ENGINE

INPUT/OUTPUT FUEL PIPE

the intercooler W/A assures the perfect functioning of the generator independently of the external ambient temperature, therefore the alternator and the engine will work at ideal temperature optimizing the performance and reliability of the gen-set.
The generator may be installed in any room on the vessel without the need of ventilation blowers.
Extremely compact and quiet, the generator is equipped with a double shock absorbing system to increase comfort: the first one absorbs vibrations from engine-alternator to the frame, the second one absorbs residual micro-vibrations from frame to vessel.

COMPACT DESIGN

EASY INSTALLATION

SUPER SILENCED

We reserve the right to modify the data, images and drawings in this document without prior notice.
For more detailed information, please contact your local distributor or Mase Generators S.p.A.

mase generators spa
Via Tortona, 345 | 47522 - Cesena (FC) | Italy
Tel. +39 0547 354311
commercial@masegenerators.com
www.masegenerators.com

mase GENERATORS
Believing in change.

IS 36

Output power 36 kW

mase GENERATORS
Believing in change.

CONTROL PANEL

_ CBU EVO IL4 device controls and drives the genset. The large display and control pushbuttons allow an easy use and monitoring:

- Manual start
- Voltage Vac
- Frequency Hz
- Hour meter
- Genset Battery voltage
- Low oil pressure alarm
- Engine preheating
- Engine high temperature alarm
- Alternator battery charger failure alarm
- Protection alarm for frequency and rpm
- Alarm history
- Maintenance warning
- General alarm outlet
- RUN outlet
- Ready outlet
- Programmable AUX outlet

_ Emergency stop button

_ Magneto-thermal protection

ENGINE

_ Easy maintenance access to the feeding and lubrification systems, the sea water pump and the air filter

_ Double vibration dumping system

_ Oil drain pump

SOUNDPROOF CABIN

_ Made of extremely light marine aluminum with very high resistance to external agents

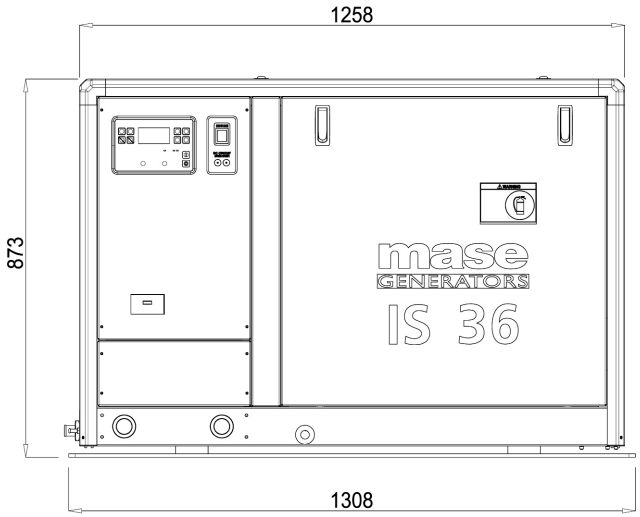

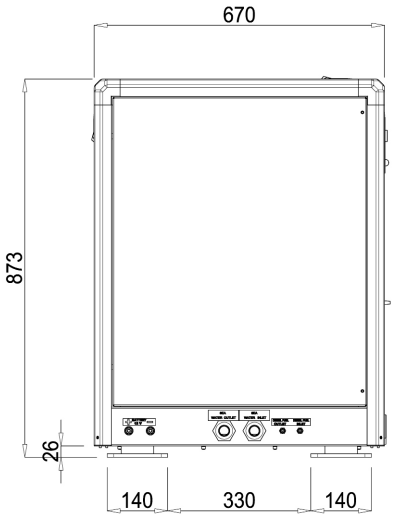

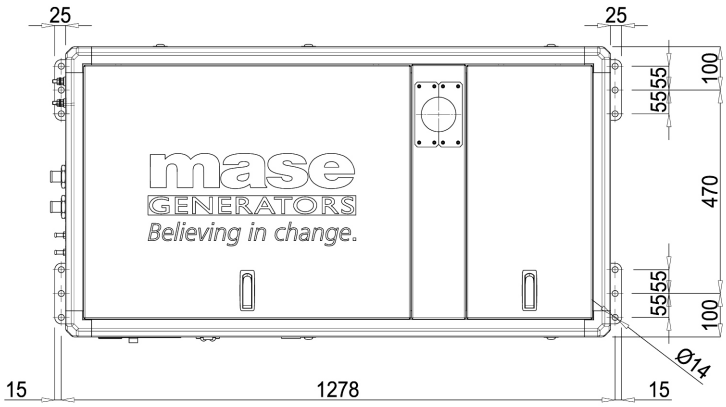

IS 36

Output power 36 kW

mase GENERATORS
Believing in change.

	50 Hz
AC alternator -	Synchronous, 4 poles, self-energized, brushless, with AVR
Cooling -	Air / Water (Intercooler W/A)
Voltage -	115 - 230 V
Frequency -	50 Hz
Amps -	313 - 156.5 A
Max power -	36 kW
Continuous power -	32 kW
Power Factor -	cos ø 1
Insulating class -	H
Voltage stability -	±2%
Frequency stability -	±5%

The power is referred to a sea water temperature up to 31°, an atmosferic pressure of 100 KPa and a humidity percentage of 30%

Model -	Yanmar 4TNV98T
Type -	Diesel 4 stroke
Cylinders -	nr 4
Bore -	98 mm - 3.86 in
Stroke -	110 mm - 4.33 in
Displacement -	3108 cc - 189.66 CID
Power -	55.9 hp - 41.12 kWm (at 1500 RPM)
RPM -	1500
Compression ratio -	18.5:1
Combustion system -	Direct injection
Engine head material -	Cast iron
Speed governor -	Centrifugal mechanical
Lubrication system -	Forced
Oil sump capacity with filter -	5.5 l - 1.55 gl
Engine stop system -	Electromagnet
Fuel pump -	Electric
Max. fuel pump head -	700 mm - 2.29 ft
Fuel consumption -	10.8 l/h - 2.85 gl/h
Air intake -	2700 l/min - 95 cfm
Starting battery -	100 Ah - 12 V
Battery charger -	40 Ah - 12 V
Starter motor -	2.3 kW - 12 V
Max. inclination -	25°
Water pump flow -	40 l/min - 10.5 gl/min
Sea water inlet pipe Ø -	25 mm - 1"
Exhaust pipe Ø -	76 mm - 3"
Input/Output fuel pipe Ø -	8 mm - 5/16"
Dimensions (L x W x H) -	1258 x 670 x 873 mm - 49.52 x 26.4 x 34.4 in (with soundproof box)
Weight -	660 Kg - 1455 lb (with soundproof box)
Noise Level -	52 dBA at 7 mt (23 ft)

IS 36

Output power 36 kW

mase GENERATORS
Believing in change.

	Accessory	Code
ACCESSORIES ON REQUEST	• Filtering kit: sea water inlet, sea water strainer, taps, fittings D.25 - ref.4	03793
	• Siphon break D.25 - ref.3	015849
	• Vetus muffler LP75 WLOCK LP75	70856
	• VETUS silencer MP75	71121
	• Centek muffler 3" - ref.5	71282
	• Centek 3" water/gas exhaust separator - ref.6	71283
	• Remote START/STOP panel with 20m cable for Comap IL4 - ref.1	037561
	• Comap IL4 remote start panel with 20-meter cable - ref.2	039607
	• Oil water senders kit IS Kubota	011084
	• Cruise KIT 2024	913809

.1

.2

.3

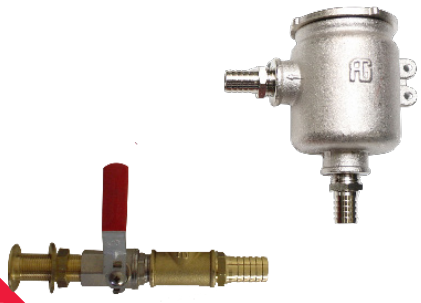
.4

.5

.6