mariner 3400 T - 4200 T

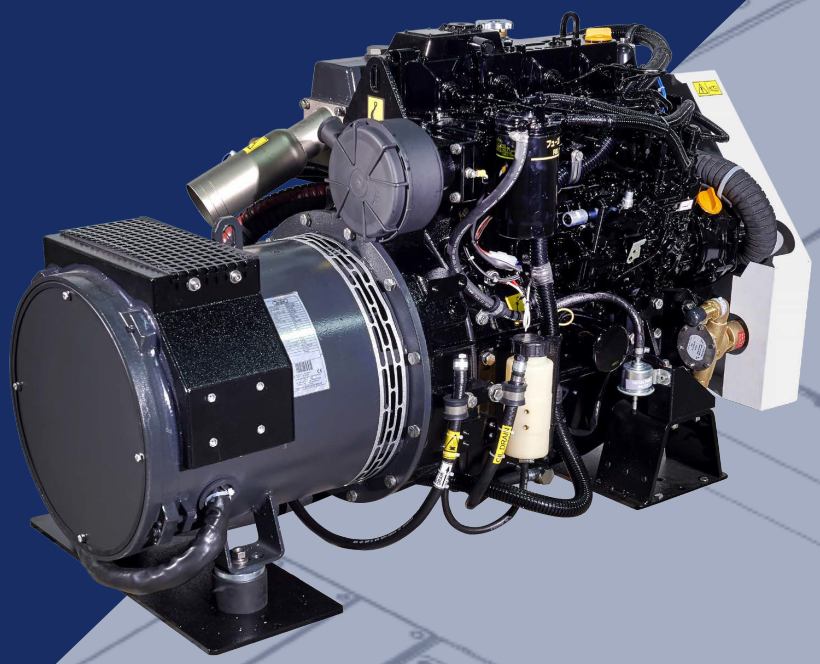

CONTROL PANEL

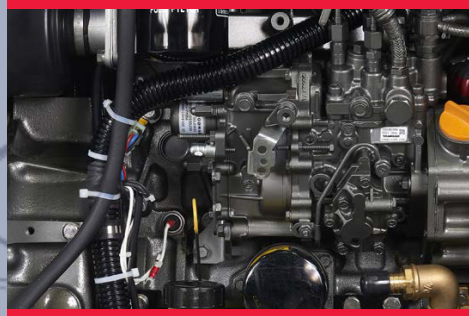

YANMAR ENGINE

INPUT/OUTPUT FUEL PIPE

the engine is cooled by a coolant loop in a closed circuit. The system consists of a heat exchanger, inside which the heat exchange between coolant and sea water takes place. Two separate pumps provide for the circulation of coolant and seawater. Air flows ensure effective cooling of the alternator.
The excellent accessibility makes maintenance operations easier, even with the generator installed in confined environments.

COMPACT DESIGN

EASY INSTALLATION

We reserve the right to modify the data, images and drawings in this document without prior notice.
For more detailed information, please contact your local distributor or Mase Generators S.p.A.

mase generators spa
Via Tortona, 345 | 47522 - Cesena (FC) | Italy
Tel. +39 0547 354311
commercial@masegenerators.com
www.masegenerators.com

mase GENERATORS
Believing in change.

mariner 3400 T - 4200 T

Three-phase output power 36.2 kVA 50 Hz - 42.5 kVA 60 Hz

mase GENERATORS
Believing in change.

CONTROL PANEL

_ CBU EVO IL4 device controls and drives the genset. The large display and control pushbuttons allow easy use and monitoring:

- Manual start
- Voltage Vac
- Frequency Hz
- Hour meter
- Genset battery voltage
- Oil low pressure alarm
- Engine preheating
- Engine high temperature alarm
- Alternator battery charger failure alarm
- Protection alarm for frequency and rpm
- Alarm history
- Maintenance warnings
- General alarm outlet
- RUN outlet
- Ready outlet
- Programmable AUX outlet

_ Emergency stop button

_ Magneto-thermal protection

ENGINE

_ Easy maintenance access to the feeding and lubrification systems,
the sea water pump and the air filter

_ Double vibration dumping system

_ Oil drain pump

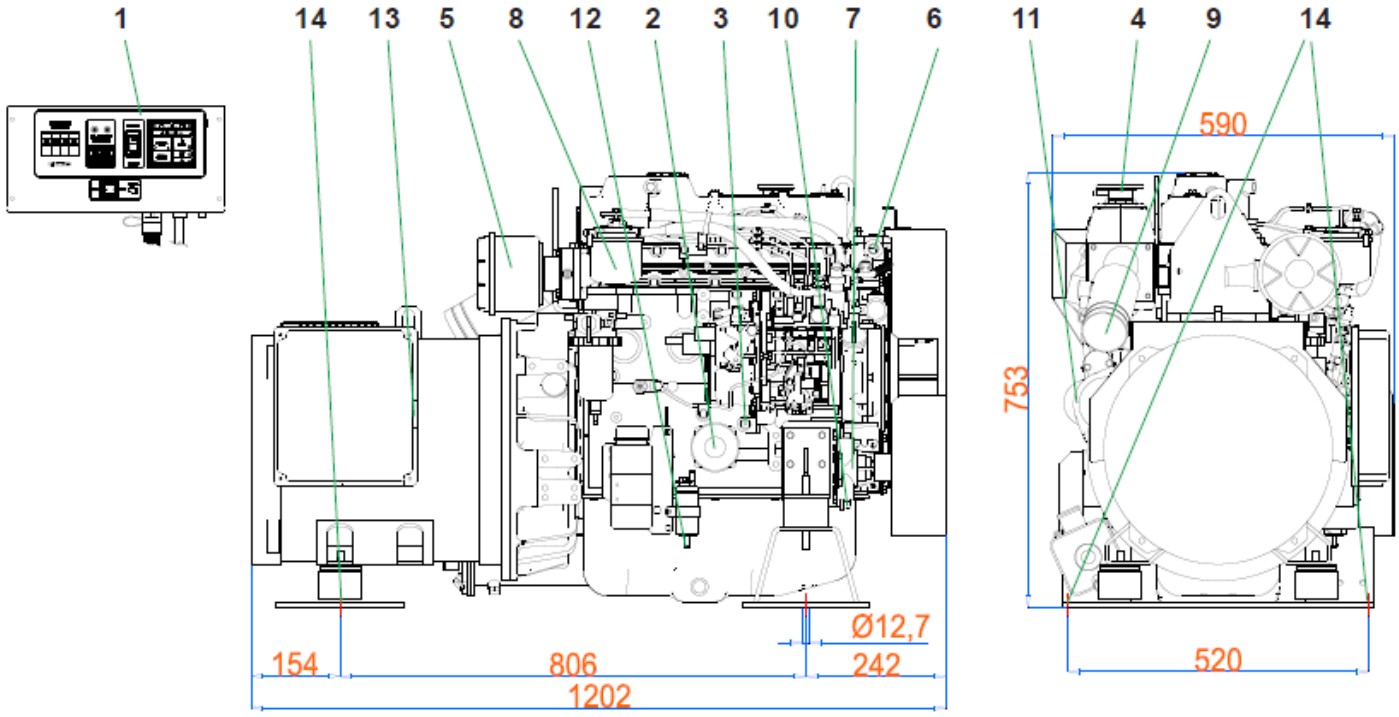

1. Control panel
2. Engine oil filter cartridge
3. Oil dipstick
4. Engine oil cap
5. Air filter
6. Closed circuit water pump
7. Seawater pump
8. Fuel filter
9. Seawater exhaust connection (ø 50mm)
10. Seawater inlet (ø 16mm)
11. Battery connection
12. Fuel tank connection (ø 8mm)
13. Electric cables outlet
14. Fixing stirrups

mariner 3400 T - 4200 T

CE Three-phase output power 36.2 kVA 50 Hz - 42.5 kVA 60 Hz

mase GENERATORS
Believing in change.

	50 Hz	60 Hz
AC alternator -	Synchronous, 4 poles, with AVR	
Cooling -	Air	
Voltage -	400 V	480 V
Frequency -	50 Hz	60 Hz
Amps -	52.3 A	51.2 A
Max power -	36.2 kVA	42.5 kVA
Continuous power -	33 kVA	39.5 kVA
Power Factor -	cos ø 0.8	
Insulating class -	H	
Voltage stability -	±2%	
Frequency stability -	±5%	

The power is referred to an atmospheric pressure of 100 kPa, a humidity percentage of 30% and an ambient temperature of 25°C.

Model -	Yanmar 4TNV98	
Type -	Diesel	
Cylinders -	nr 4	
Cylinder block material -	Cast iron	
Bore -	98 mm - 3.86 in	
Stroke -	110 mm - 4.33 in	
Displacement -	3319 cc - 202.54 CID	
Power -	47 hp - 34.57 kWm (at 1500 RPM)	56 hp - 41.19 kWm (at 1800 RPM)
RPM -	1500	1800
Compression ratio -	18.5:1	
Combustion system -	Direct injection	
Engine head material -	Cast iron	
Speed governor -	Mechanical	
Lubrication system -	Forced	
Oil sump capacity with filter -	8.20 l - 2.31 gl	
Engine stop system -	Electromagnet	
Fuel pump -	Electric	
Max. fuel pump head -	700 mm - 27.5 in	
Fuel consumption -	10.8 l/h - 2.85 gl/h	12.4 l/h - 3.28 gl/h
Air intake -	2700 l/min - 95 cfm	
Starting battery -	100 Ah - 12 V	
Battery charger -	40 Ah - 12 V	
Starter motor -	2.3 kW - 12 V	
Max. inclination -	25°	
Water pump flow -	40 l/min - 10.56 gl/min	45 l/min - 11.88 gl/min
Sea water inlet pipe Ø -	25 mm - 1"	
Exhaust pipe Ø -	80 mm - 3.1 in	
Input/Output fuel pipe Ø -	8 mm - 5/16"	
Dimensions (L x W x H) -	1202 x 590 x 753 mm - 47.3 x 23.2 x 29.6 in	
Weight -	565 Kg - 1246 lb	

mariner 3400 T - 4200 T

Three-phase output power 36.2 kVA 50 Hz - 42.5 kVA 60 Hz

mase GENERATORS
Believing in change.

	Accessory	Code
ACCESSORIES ON REQUEST	• Filtering kit: sea water inlet, water filter, valves, fittings D.25 - ref.4	03793
	• Siphon break kit D.25 - ref.3	015849
	• Centek 3" muffler - ref.5	71282
	• Centek 3" water/gas separator - ref.6	71283
	• Remote START/STOP panel with 20m cable for Comap IL4 - ref.1	037561
	• Comap IL4 remote start panel with 20m cable - ref.2	039607
	• Cruise Kit	910994

.1

.2

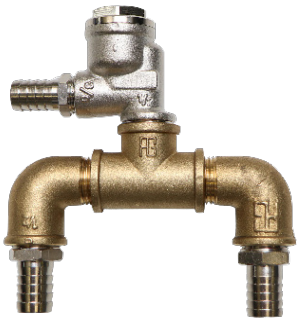
.3

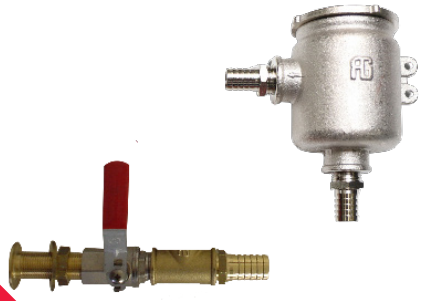
.4

.5

.6