SPARE PARTS CATALOGUE

Brand: NANNI DIESEL

Model: Moteur 5.250TDI

Version: Standard

V. 28/03/2006

Nanni Industries S.A.
Z.I. - B.P. 107 11, Avenue Mariotte 33260 La Teste

Web: http://www.nannidiesel.com
Tel. 33 (0) 5 56 22 30 60
Fax. 33 (0) 5 56 22 30 79

Brand: NanniDiesel

Model: Moteur 5.250TDI

Version: Standard

Subassembly: Crank case / Cylinders

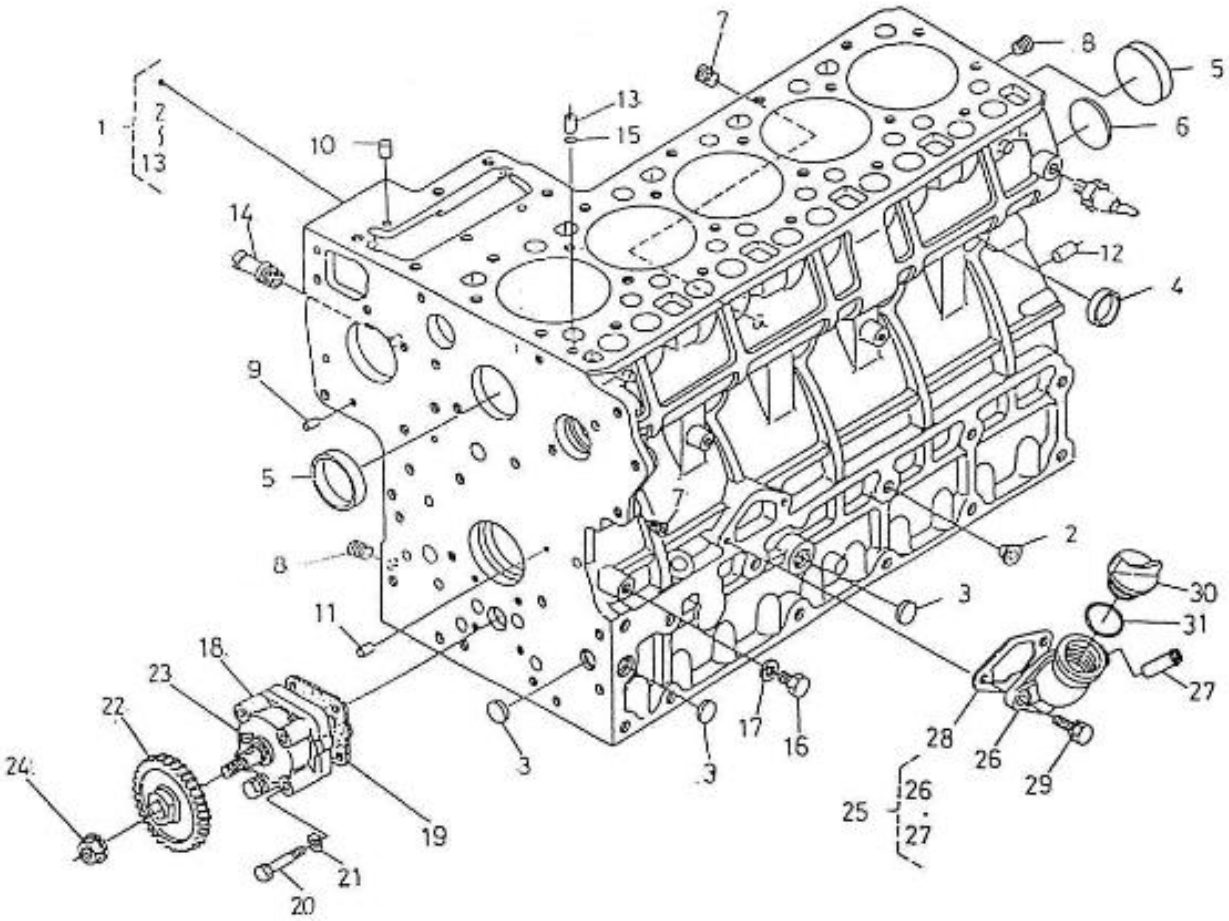

N.	Item	Description	Qty	Notes
1	970310415	COMP.CRANKCASE	1	
2	970301902	PLUG	3	
3	970301903	PLUG	3	
4	970301905	CAP,SEALING	8	
5	970301906	CAP,FREEZE	2	
6	970302704	PLUG,EXPANTION	1	
7	970490108	PLUG,SOCK	7	
8	970490109	PLUG,SOCK	2	
9	970301907	PIN,CYLINDRICAL	2	
10	970490122	PIN,CYLINDRICAL	2	
11	970301908	PIN,CYLINDRICAL	2	
12	970301909	PIN,CYLINDRICAL	1	
13	970490112	PIN,PIPE	1	
14	970302119	PIPE,WATER RETURN 1	1	
15	970490116	O-RING	1	
16	970301912	PLUG	1	
17	970491131	WASHER,SEAL	1	
18	970307901	PUMP,OIL CPL.	1	
19	970301914	GASKET,OIL PUMP	1	
20	970302926	BOLT,M 6X 48	4	
21	970310417	WASHER,SPRING	4	
22	970307902	GEAR,OIL PUMP DRIVE	1	
23	970493118	KEY,FEATHER H-HE	1	
24	970301916	NUT	1	
25	970310418	FLANGE	1	
26	970310419	FLANGE	1	
27	970307535	HOSE	1	
28	970310420	GASKET NA	1	
29	970492138	BOLT,M 8X 22	2	
30	970490510	CAP,FILLING OIL	1	
31	970490511	O-RING	1	

nannidiesel energy in blue

Nanni Industries S.A.
Z.I. - B.P. 107 11, Avenue Mariotte 33260 La Teste

Web: http://www.nannidiesel.com
Tel. 33 (0) 5 56 22 30 60
Fax. 33 (0) 5 56 22 30 79

Brand: NanniDiesel

Model: Moteur 5.250TDI

Version: Standard

Subassembly: Timing case

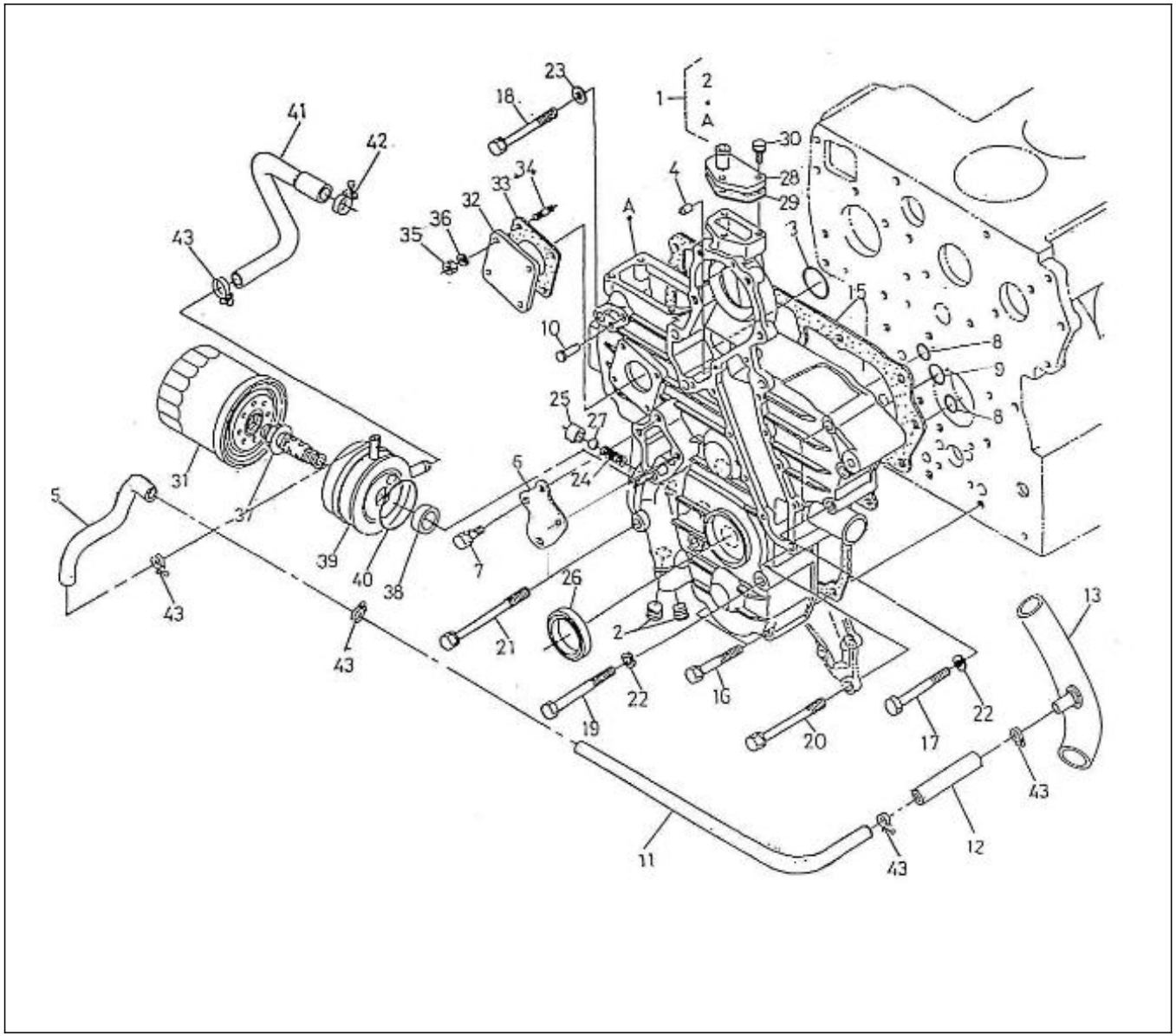

N.	Item	Description	Qty	Notes
1	970310533	COVER,TIMING CASE	1	
2	970310315	PLUG	2	
3	970301923	O-RING	1	
4	970301908	PIN,CYLINDRICAL	2	
5	906200106	HOSE	1	
6	95203039	CAP, FREEZE	1	
7	970147402	BOLT,M 8X 25	3	
8	970301922	O-RING	2	
9	970302696	O-RING	1	
10	970490204	PIN,TIMING COVER	1	
11	51410027	PIPE	1	
12	32813001	HOSE	1	
13	970310281	HOSE	1	
15	970310535	GASKET,GEAR CASE NA	1	
16	970301926	BOLT,M 8X 60	3	
17	970301927	BOLT,M 8X 70	3	
18	970310536	BOLT	2	
19	970301928	BOLT,M 8X 80	2	
20	970310929	COVER,OIL FILTER	3	
21	970310537	BOLT	2	
22	970490904	WASHER,SPRING D 8	5	
23	970301933	WASHER,PLAIN D 8	1	
24	970310538	SPRING	1	
25	970302075	SEAT,VALVE	1	
26	970310539	SEAL,OIL	1	
27	970302076	BEARING,BALL	1	
28	970301931	FLANGE,WATER RETURN	1	
29	970301932	GASKET,FLANGE W/RETURN	1	
30	970491536	BOLT,M 6X 20	3	
31	970603003	FILTER,ELEMENT OIL 4.180/90	1	
32	970490222	COVER,INJ.TIMING	1	
33	970491736	GASKET	1	
34	970490224	STUD	4	
35	970151133	NUT,M 6	4	
36	970310540	WASHER,SPRING	4	
37	970310541	CONNECTOR	1	
38	970310542	COLLAR	1	
39	970310543	ASSY COOLER,OIL	1	
40	970310544	O RING	1	
41	970310545	PIPE,OIL COOLER 1	1	
42	970302121	CLAMP,HOSE	1	
43	970439306	CLAMP,HOSE 11-17	4	

nannidiesel energy in blue

Nanni Industries S.A.
Z.I. - B.P. 107 11, Avenue Mariotte 33260 La Teste

Web: http://www.nannidiesel.com
Tel. 33 (0) 5 56 22 30 60
Fax. 33 (0) 5 56 22 30 79

Brand: NanniDiesel

Model: Moteur 5.250TDI

Version: Standard

Subassembly: Oil pan

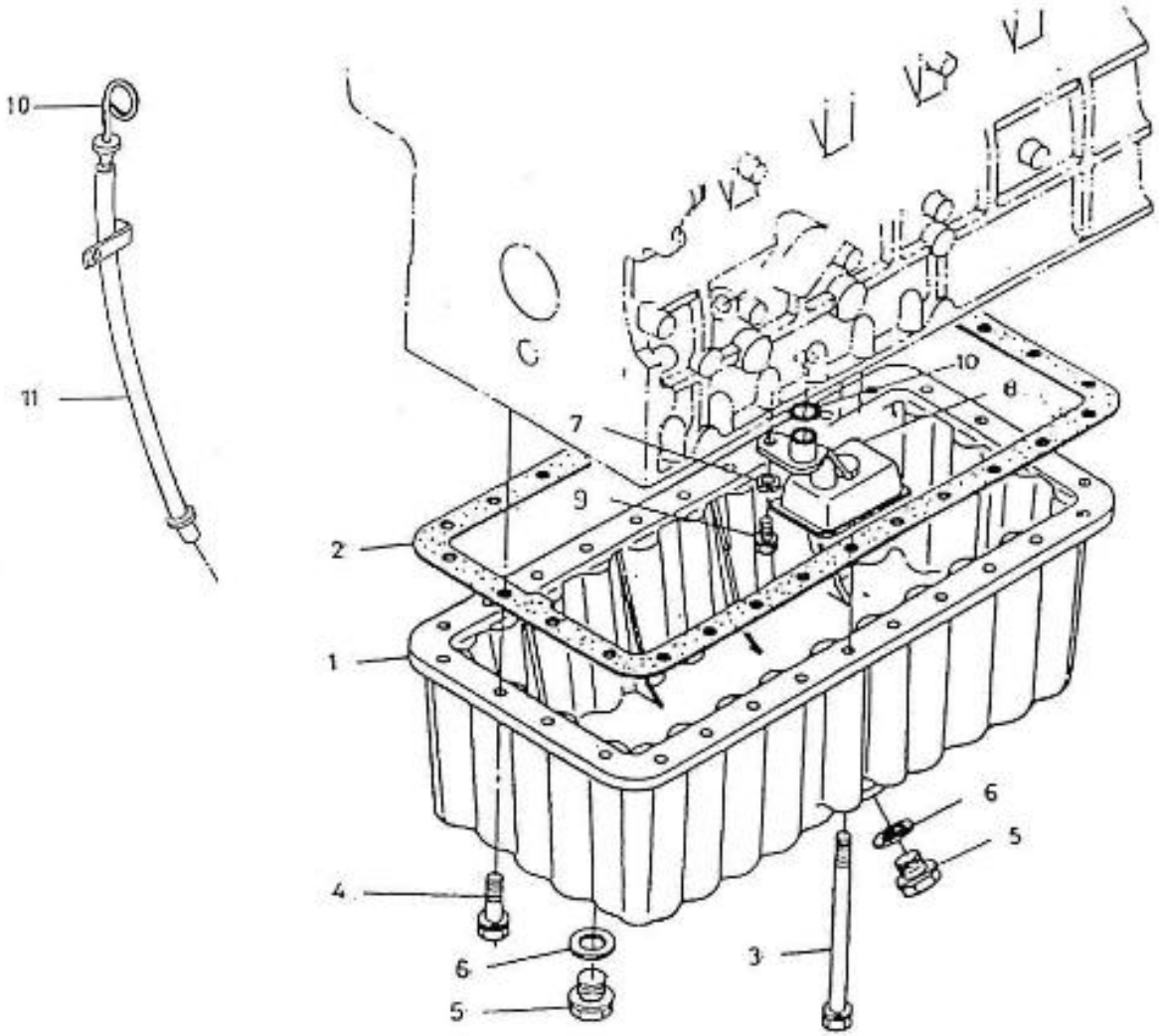

N.	Item	Description	Qty	Notes
1	970307903	PAN,OIL	1	
2	970307904	GASKET,OIL PAN NA	1	
3	970307905	BOLT	2	
4	970307906	BOLT	26	
5	970307907	PLUG,DRAIN	2	
6	970307489	GASKET	2	
7	970490904	WASHER,SPRING D 8	1	
8	970307908	FILTER,OIL 1	1	
9	970140919	BOLT, M8X14	1	
10	970307909	O RING	1	
11	970310299	DIPSTICK	1	
12	970310298	GUIDE,TUBE OIL DIPSTICK	1	

nannidiesel energy in blue

Nanni Industries S.A.
Z.I. - B.P. 107 11, Avenue Mariotte 33260 La Teste

Web: http://www.nannidiesel.com
Tel. 33 (0) 5 56 22 30 60
Fax. 33 (0) 5 56 22 30 79

Brand: NanniDiesel

Model: Moteur 5.250TDI

Version: Standard

Subassembly: Cylinder head cover

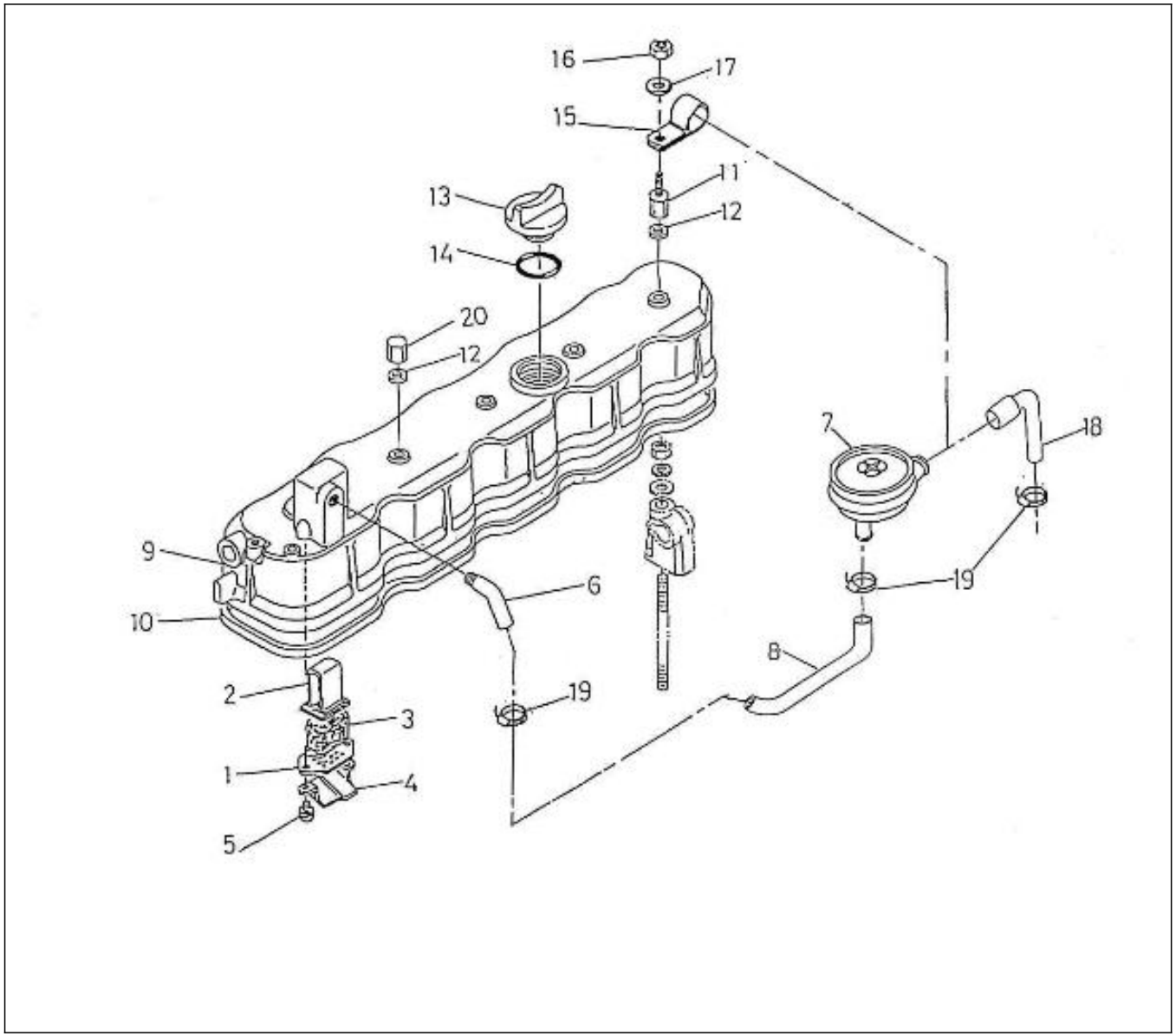

N.	Item	Description	Qty	Notes
1	970301990	PLATE,BREATHER ELEMENT N01	1	
2	970490302	HOUSING,BREATHER ELEMENT	1	
3	970490305	FILTER,BREATHER ELEMENT	1	
4	970301991	SHIELD,OIL BREATHER	1	
5	970310423	SCREW,WITH WASHER	2	
6	970301993	PIPE,BREATHER	1	
7	51.01804-0008	PRESSURE REGULATING VALVE	1	
8	48328070	HOSE	1	
9	970307916	COVER,HEAD	1	
10	970307917	GASKET,HEAD COVER	1	
11	43320274	SPACER	1	
12	970491131	WASHER,SEAL	5	
13	970490510	CAP,FILLING OIL	1	
14	970490511	O-RING	1	
15	970304071	CLAMP	1	
16	970635460	NUT,M 6	1	
17	970635459	WASHER,PLAIN D 6	1	
18	48328069	HOSE	1	
19	970301604	CLAMP,HOSE 15-24	3	
20	970301996	NUT,CAP	4	

nannidiesel energy in blue

Nanni Industries S.A.
Z.I. - B.P. 107 11, Avenue Mariotte 33260 La Teste

Web: http://www.nannidiesel.com
Tel. 33 (0) 5 56 22 30 60
Fax. 33 (0) 5 56 22 30 79

Brand: NanniDiesel

Model: Moteur 5.250TDI

Version: Standard

Subassembly: Cylinder head

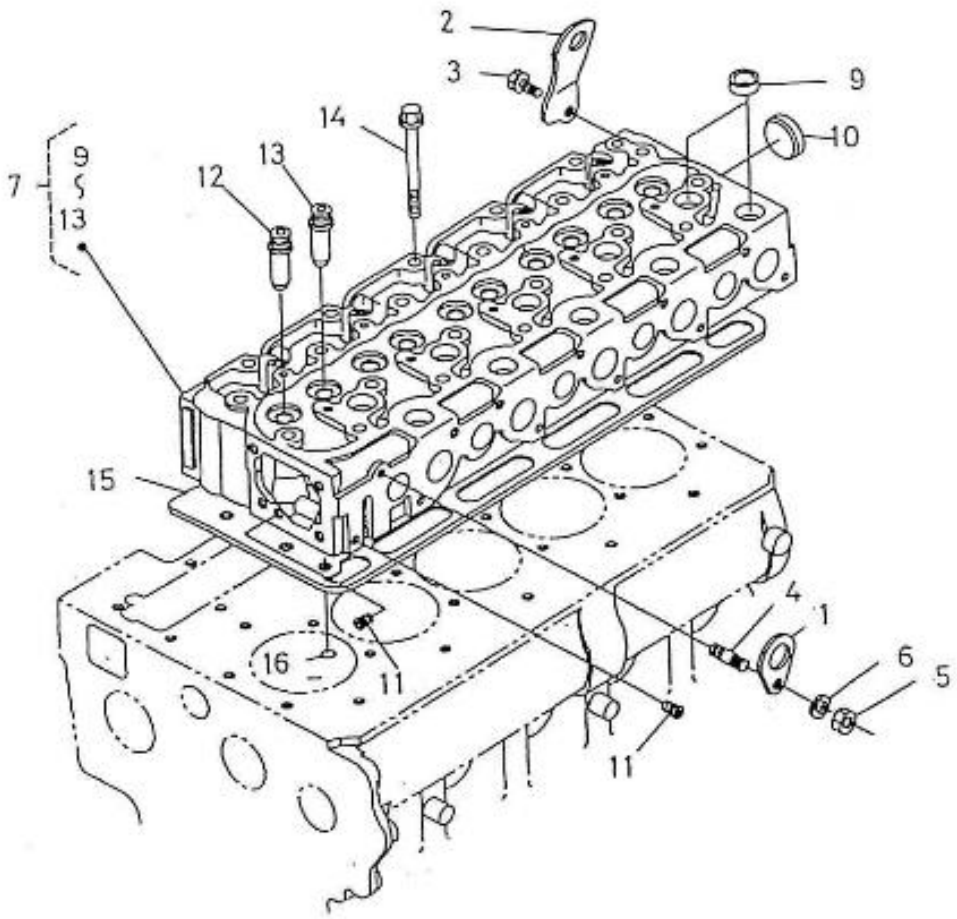

N.	Item	Description	Qty	Notes
1	970490901	HOOK,ENGINE 2.60-3.90-4.110	1	
2	970307296	HOOK,ENGINE	1	
3	970490919	BOLT,M 8X 16	1	
4	970301935	STUD	1	
5	970490903	NUT,M 8	1	
6	970490904	WASHER,SPRING D 8	1	
7	970310421	COMP.HEAD,CYLINDER	1	
9	970301937	CAP,FREEZE	15	
10	970301938	CAP,FREEZE	1	
11	970490107	PLUG,SOCK	2	
12	970301939	GUIDE,VALVE INTAKE 4.190	5	
13	970301940	GUIDE,VALVE EXHAUST	5	
14	970307298	BOLT,CYLINDER HEAD	22	
15	970310422	GASKET,CYL.HEAD	1	
16	970490116	O-RING	1	
17	970310483	COMP.FLANGE,WATER	1	
18	970307535	HOSE	1	
19	970302124	GASKET,WATER FLANGE	1	
20	970492138	BOLT,M 8X 22	2	
21	970302088	STUD,M 8X 22	1	
22	970301927	BOLT,M 8X 70	1	
23	970490903	NUT,M 8	1	
24	970490904	WASHER,SPRING D 8	2	
25	970302120	PIPE,WATER RETURN 2	1	
26	970302121	CLAMP,HOSE	2	
27	970310651	GASKET	1	
28	970310650	PLUG	1	

nannidiesel energy in blue

Nanni Industries S.A.
Z.I. - B.P. 107 11, Avenue Mariotte 33260 La Teste

Web: http://www.nannidiesel.com
Tel. 33 (0) 5 56 22 30 60
Fax. 33 (0) 5 56 22 30 79

Brand: NanniDiesel

Model: Moteur 5.250TDI

Version: Standard

Subassembly: Valves & Springs

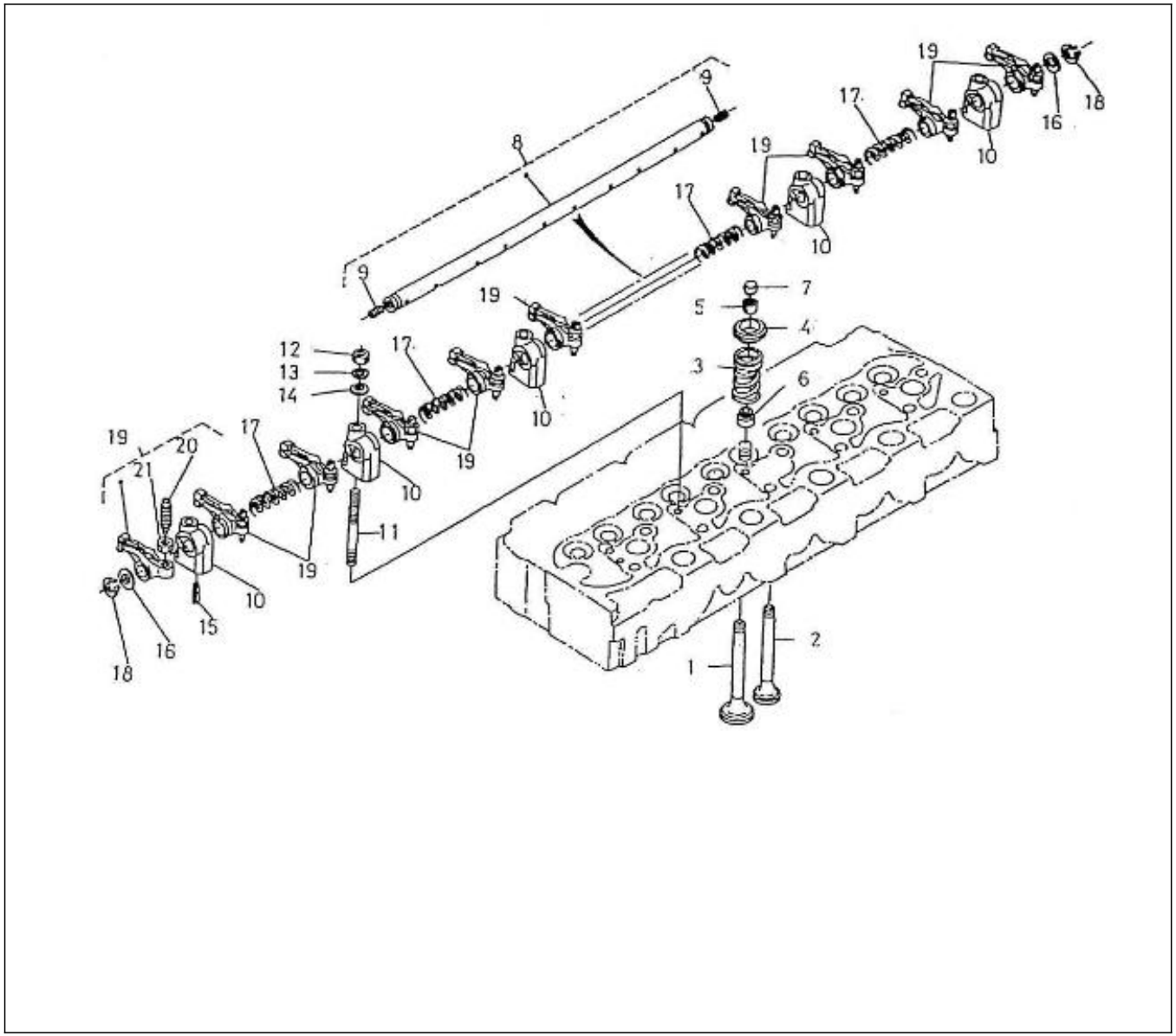

N.	Item	Description	Qty	Notes
1	970307772	VALVE,INLET	5	
2	970310492	VALVE,EXHAUST	5	
3	970302005	SPRING,VALVE	10	
4	970302006	RETAINER,VALVE SPRING	10	
5	970302007	COLLET,VALVE SPRING	10	
6	970302008	SEAL,VALVE STEM	10	
7	970302009	CAP,VALVE	10	
8	970307774	ROCKER ARM AXLE	1	
9	970302011	SCREW,SET	2	
10	970302012	BRACKET,ROCKER ARM	5	
11	970302013	STUD	5	
12	970490903	NUT,M 8	5	
13	970490904	WASHER,SPRING D 8	5	
14	970301933	WASHER,PLAIN D 8	5	
15	970310494	PIN,SPRING	1	
16	970302015	WASHER	2	
17	970302016	SPRING,ROCKER ARM	4	
18	970302017	CIR-CLIP,EXTERNAL	2	
19	970307402	ASSY ROCKER ARM	10	
20	970302019	SCREW,ADJUSTING	10	
21	970302021	NUT	10	

nannidiesel energy in blue

Nanni Industries S.A.
Z.I. - B.P. 107 11, Avenue Mariotte 33260 La Teste

Web: http://www.nannidiesel.com
Tel. 33 (0) 5 56 22 30 60
Fax. 33 (0) 5 56 22 30 79

Brand: NanniDiesel

Model: Moteur 5.250TDI

Version: Standard

Subassembly: Camshaft

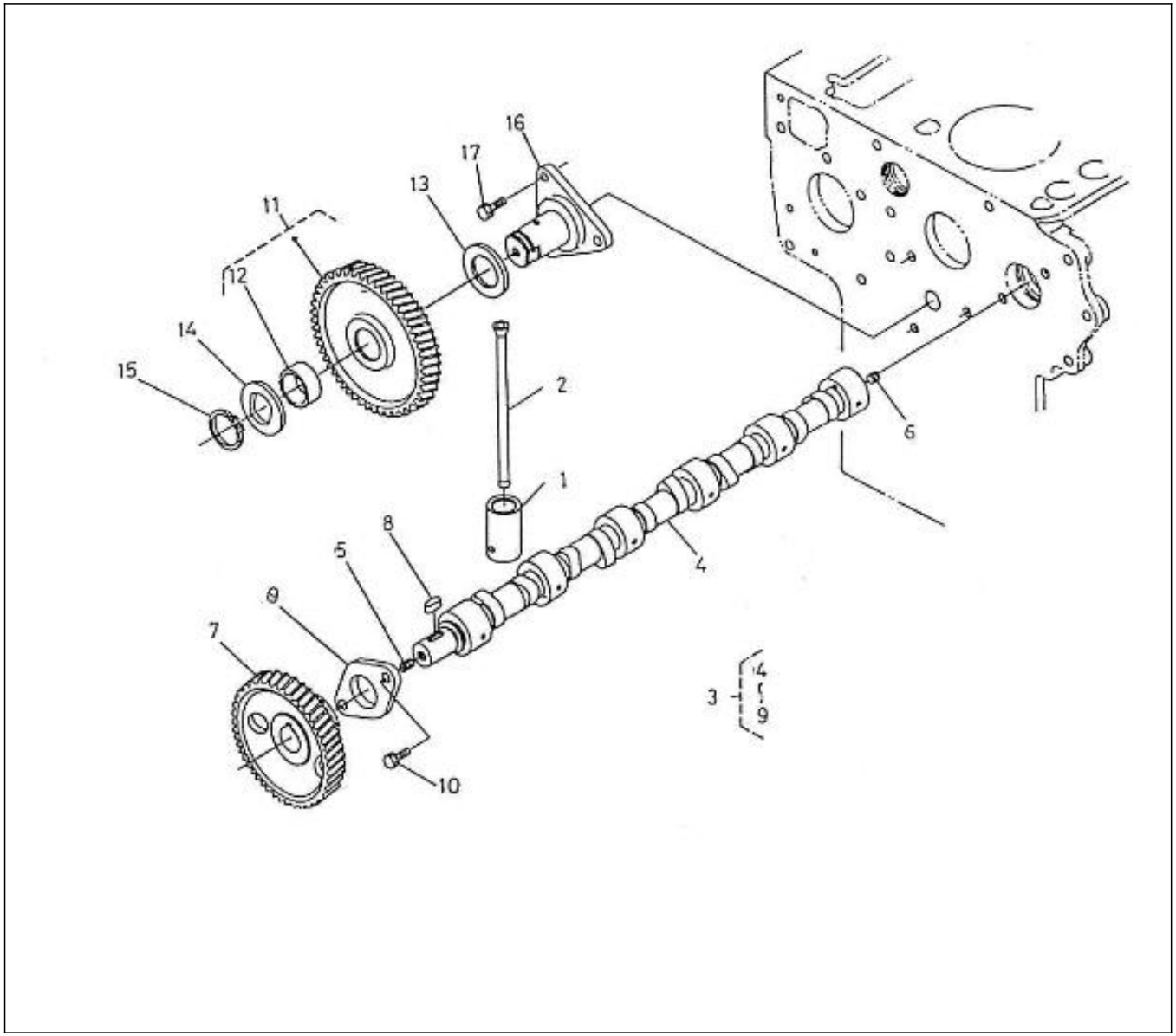

N.	Item	Description	Qty	Notes
1	970307317	TAPPET	10	
2	970307318	ROD,PUSH	10	
3	970310433	ASSY CAMSHAFT	1	
4	970310434	CAMSHAFT	1	
5	970302043	SCREW,SET	1	
6	970302975	SCREW,SET	1	
7	970307924	GEAR,CAMSHAFT	1	
8	970301966	KEY,FEATHER	1	
9	970302045	STOPPER,CAMSHAFT	1	
10	970491134	BOLT,M 8X 18	2	
11	970310435	COMP.GEAR IDLE	1	
12	970307926	BUSH,IDLE GEAR	1	
13	970307927	COLLAR	1	
14	970307928	COLLAR	1	
15	970307929	CIR-CLIP,EXTERNAL	1	
16	970307930	SHAFT,IDLE GEAR	1	
17	970491134	BOLT,M 8X 18	3	

nannidiesel energy in blue

Nanni Industries S.A.
Z.I. - B.P. 107 11, Avenue Mariotte 33260 La Teste

Web: http://www.nannidiesel.com
Tel. 33 (0) 5 56 22 30 60
Fax. 33 (0) 5 56 22 30 79

Brand: NanniDiesel

Model: Moteur 5.250TDI

Version: Standard

Subassembly: Speed control

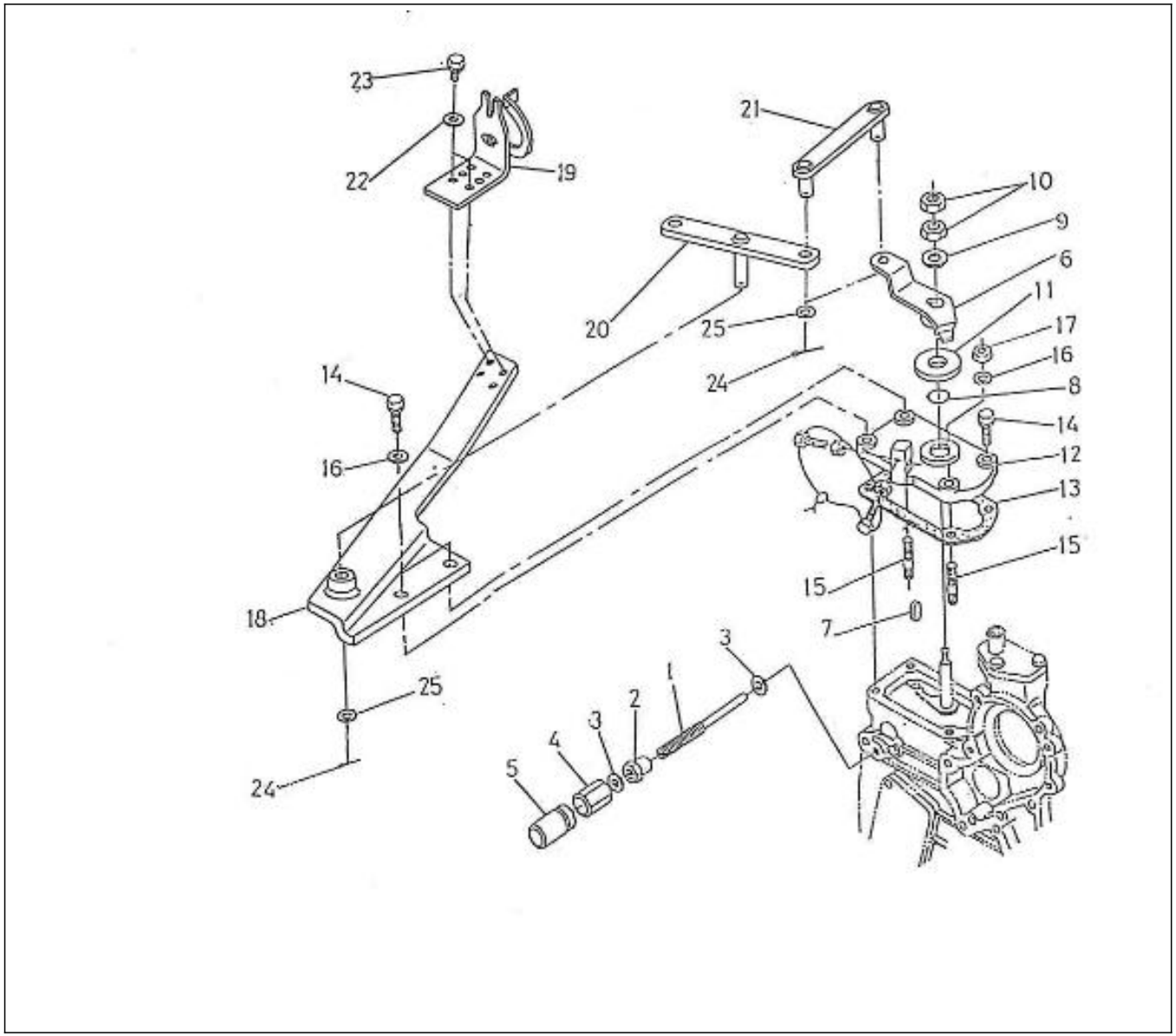

N.	Item	Description	Qty	Notes
1	970302022	SCREW,ADJUSTING	1	
2	970140402	NUT	1	
3	970150403	RING,SEAL	2	
4	970140504	NUT, CAP M8	1	
5	970310464	CAP	1	
6	970303912	LEVER,SPEED CONTROL	1	
7	970143118	KEY,FEATHER	1	
8	970302024	O-RING	1	
9	970302025	WASHER,PLAIN D 8	1	
10	970302026	NUT,M 8	21	
11	970310465	COLLAR	1	
12	970303913	COVER,SPEED CONTROL 6.280	1	
13	970302029	GASKET,COVER SPEED CONTROL	1	
14	970491537	BOLT,M 6X 25	2	
15	970490224	STUD	2	
16	970310417	WASHER,SPRING	2	
17	970151133	NUT,M 6	2	
18	95203028A	BRACKET	1	
19	48100151	BRACKET	1	
20	95203028A	BRACKET	1	
21	95203028A	BRACKET	1	
22	970300318	WASHER,SPRING D 5	2	
23	970300317	BOLT,HEX M 5X 16	2	
24	970300292	PIN,COTTER 1,6X25	3	
25	970635459	WASHER,PLAIN D 6	3	

nannidiesel energy in blue

Nanni Industries S.A.
Z.I. - B.P. 107 11, Avenue Mariotte 33260 La Teste

Web: http://www.nannidiesel.com
Tel. 33 (0) 5 56 22 30 60
Fax. 33 (0) 5 56 22 30 79

Brand: NanniDiesel

Model: Moteur 5.250TDI

Version: Standard

Subassembly: Crankshaft pistons

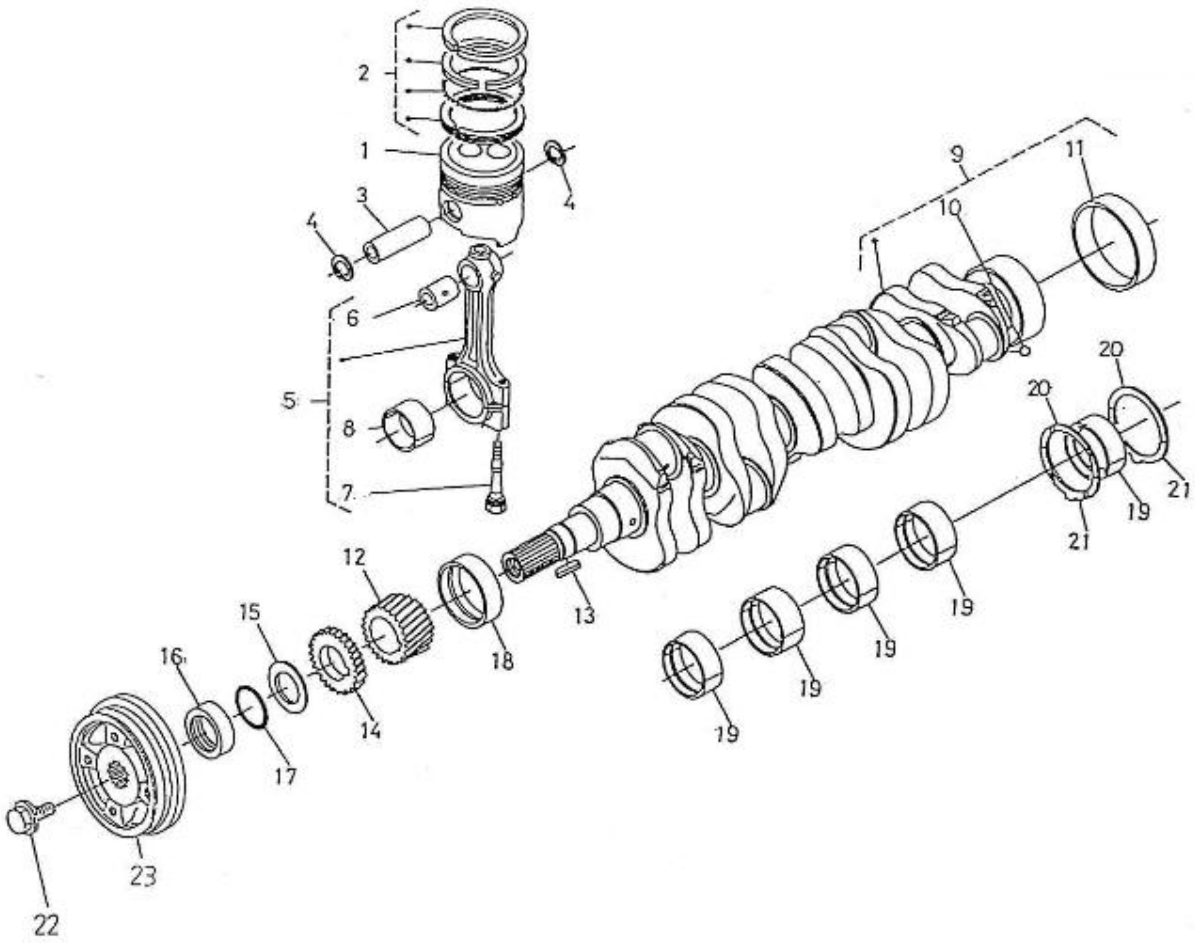

N.	Item	Description	Qty	Notes
1	970310436	PISTON	5	
1	970310437	PISTON 05	5	
2	970310438	ASSY PISTON RING	5	
2	970310439	ASSY PISTON RING 05	5	
3	970307331	PIN,PISTON	5	
4	970307332	CLIP,PISTON PIN	10	
5	970307333	ASSY ROD,CONNECTING	5	
6	970307334	BUSH,PISTON PIN	5	
7	970301934	BOLT,CONN.ROD	10	
8	970307335	METAL,CRANK PIN	5	
8	970307336	METAL,CRANK PIN 02	5	
8	970307337	METAL,CRANK PIN 04	5	
9	970310440	COMP.CRANK SHAFT	1	
10	970302897	BEARING,BALL	5	
11	970307933	SLEEVE,CRANKSHAFT	1	
12	970302984	GEAR,CRANKSHAFT	1	
13	970302985	KEY,FEATHER	1	
14	970307934	GEAR,OIL PUMP DRIVE	1	
15	970302987	SLINGER,OIL	1	
16	970307936	COLLAR,CRANK SHAFT	1	
17	970301969	O-RING	1	
18	970301972	METAL,CRANKSHAFT 1	1	
18	970307340	METAL,C/SHAFT 1 02	1	
18	970307341	METAL,C/SHAFT 1 04	1	
19	970307343	METAL,C/SHAFT 2 02	5	
19	970307344	METAL,C/SHAFT 2 04	5	
19	970301973	METAL,CRANKSHAFT 2	5	
20	970301974	METAL,SIDE 1	2	
20	970307345	METAL,SIDE 1-02	2	
20	970307346	METAL,SIDE 1-04	2	
21	970301975	METAL,SIDE 2	2	
21	970307937	METAL,SIDE 2-02	2	
21	970307938	METAL,SIDE 2-04	2	
22	970307770	BOLT	1	
23	970307769	PULLEY,FAN DRIVE	1	

nannidiesel energy in blue

Nanni Industries S.A.
Z.I. - B.P. 107 11, Avenue Mariotte 33260 La Teste

Web: http://www.nannidiesel.com
Tel. 33 (0) 5 56 22 30 60
Fax. 33 (0) 5 56 22 30 79

Brand: NanniDiesel

Model: Moteur 5.250TDI

Version: Standard

Subassembly: Crankshaft

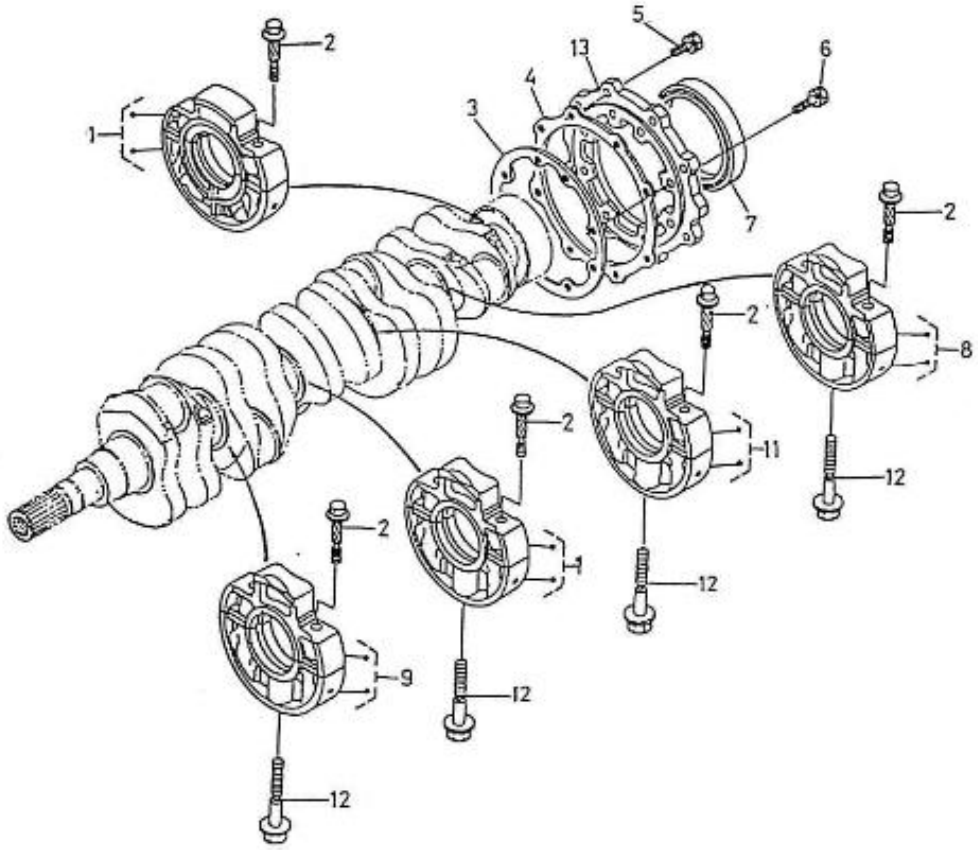

N.	Item	Description	Qty	Notes
1	970310426	F/ASSY CASE,MAIN BRG	1	
2	970307309	BOLT,BEARING CASE	10	
3	970307310	GASKET,BRG.CASE NA	1	
4	970310427	GASKET NA	1	
5	970147402	BOLT,M 8X 25	8	
6	970301986	BOLT,M 8X 28	8	
7	970310428	SEAL,OIL	1	
8	970310429	ASSY CASE,MAIN BRG	1	
9	970310430	ASSY CASE,MAIN BRG	1	
10	970310431	ASSY CASE,MAIN BRG3	1	
11	970310432	ASSY CASE,MAIN BRG4	1	
12	970307316	BOLT,BEARING CASE	4	
13	970307921	COVER,BEARING CASE	1	

nannidiesel energy in blue

Nanni Industries S.A.
Z.I. - B.P. 107 11, Avenue Mariotte 33260 La Teste

Web: http://www.nannidiesel.com
Tel. 33 (0) 5 56 22 30 60
Fax. 33 (0) 5 56 22 30 79

Brand: NanniDiesel

Model: Moteur 5.250TDI

Version: Standard

Subassembly: Flywheel

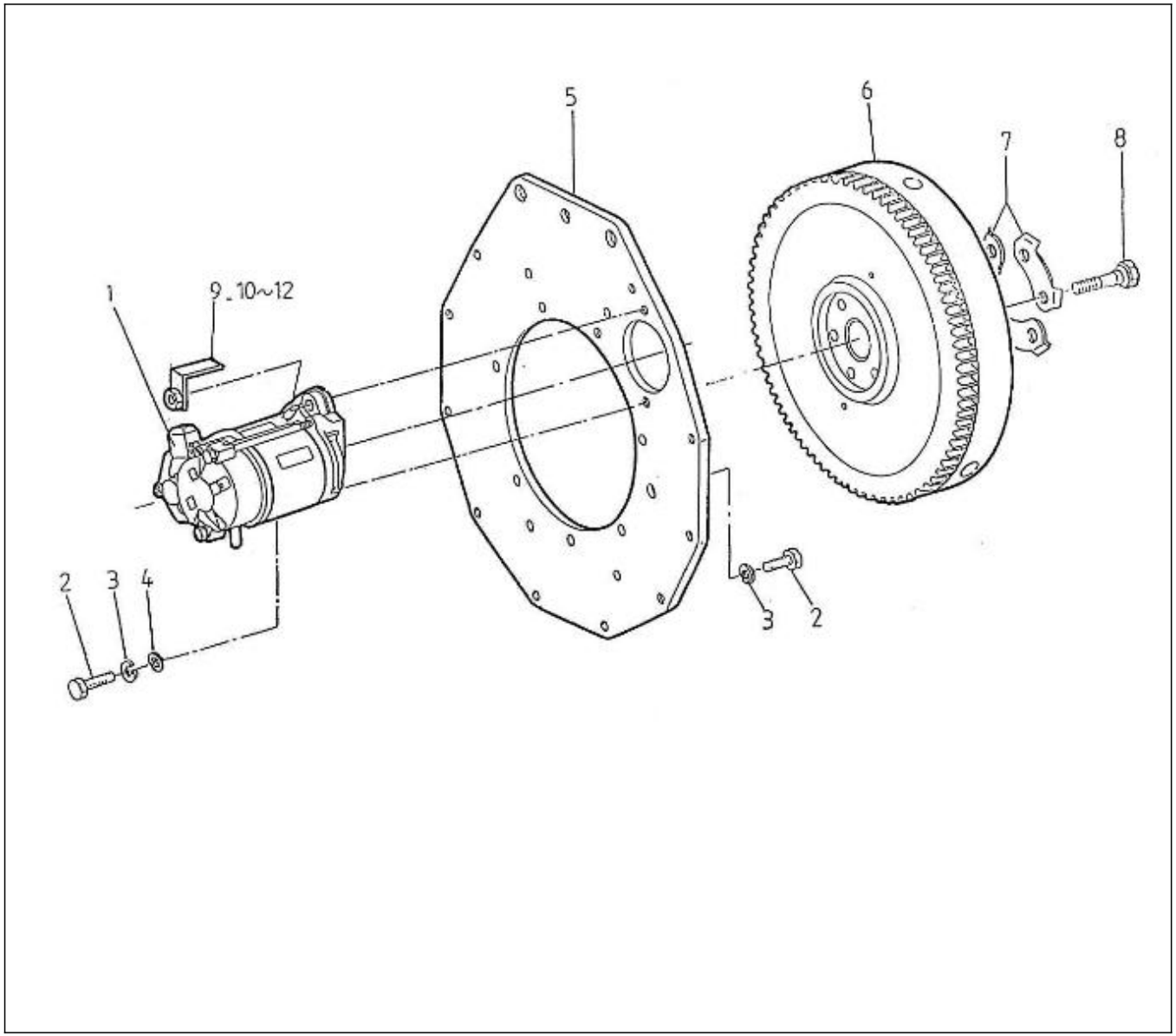

N.	Item	Description	Qty	Notes
1	970302070	STARTER,MOTOR 12V 0,8KW	1	
2	970300044	BOLT,HEX M10X1,25X 25	12	
3	970119136	WASHER,SPRING D10	13	
4	970119135	WASHER,PLAIN D10	2	
5	970302643	PLATE,REAR END 6.280	1	
6	970304018	FLYWEEL,CPL. 6.280	6	
7	970302397	WASHER,FLYWHEEL 3PCS.	1	
8	970302396	BOLT,FLYWHEEL	6	
9	970307436	NUT	1	
10	970119140	BOLT,SOCK M10X 50	1	
11	970119135	WASHER,PLAIN D10	1	
12	970119136	WASHER,SPRING D10	1	

nannidiesel energy in blue

Nanni Industries S.A.
Z.I. - B.P. 107 11, Avenue Mariotte 33260 La Teste

Web: http://www.nannidiesel.com
Tel. 33 (0) 5 56 22 30 60
Fax. 33 (0) 5 56 22 30 79

Brand: NanniDiesel

Model: Moteur 5.250TDI

Version: Standard

Subassembly: Camshaft fuel

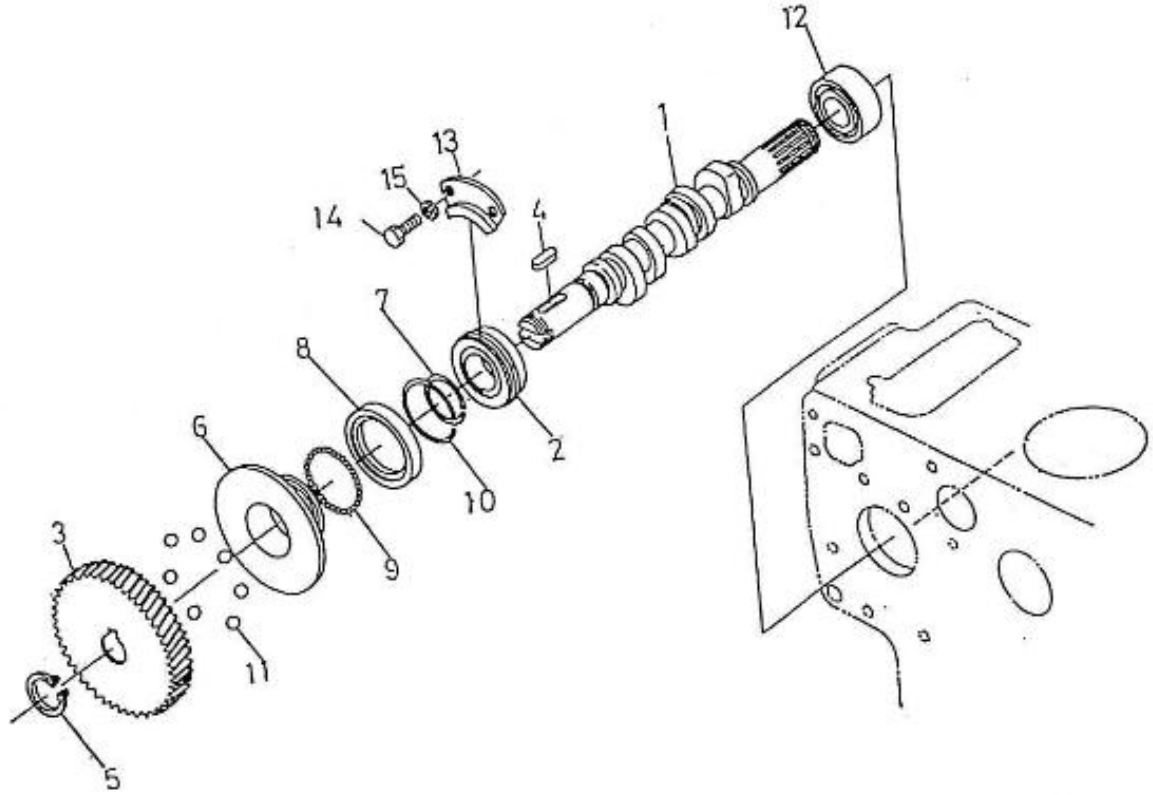

N.	Item	Description	Qty	Notes
1	970307940	CAMSHAFT,FUEL	1	
2	970302094	BEARING,CASE	1	
3	970307351	GEAR,INJECTION PUMP	1	
4	970302096	KEY,FEATHER	1	
5	970302097	CIR-CLIP,EXTERNAL	1	
6	970307352	SLEEVE,GOVERNOR	1	
7	970302099	CIR-CLIP,GOVERNOR SLEEVE	1	
8	970303929	CASE,GOVERNOR BALL	1	
9	970492130	BEARING,BALL FUEL CAMSHAFT	39	
10	970302100	CIR-CLIP,GOVERNOR BALL CASE	1	
11	970303930	BEARING,BALL	7	
12	970302105	BEARING,CASE	1	
13	970302106	STOPPER,FUEL CAMSHAFT	1	
14	970140919	BOLT, M8X14	2	
15	970140919	BOLT, M8X14	2	
15	970307939	CAMSHAFT,FUEL CPL.	1	

nannidiesel energy in blue

Nanni Industries S.A.
Z.I. - B.P. 107 11, Avenue Mariotte 33260 La Teste

Web: http://www.nannidiesel.com
Tel. 33 (0) 5 56 22 30 60
Fax. 33 (0) 5 56 22 30 79

Brand: NanniDiesel

Model: Moteur 5.250TDI

Version: Standard

Subassembly: Injection & Fuel pump

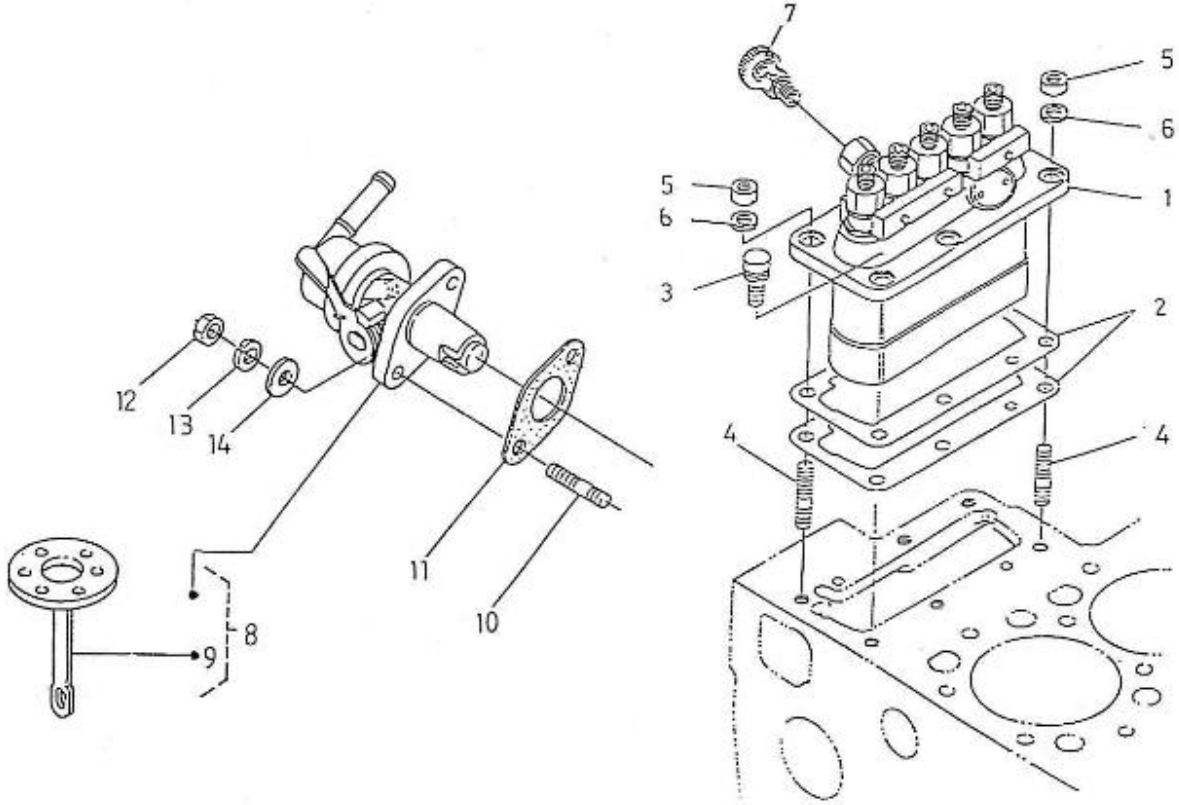

N.	Item	Description	Qty	Notes
1	970307945	ASSY PUMP,INJECTION	1	
2	970307946	SHIM,INJ.PUMP 0.30	2	
3	970492138	BOLT,M 8X 22	3	
4	970302088	STUD,M 8X 22	2	
5	970490903	NUT,M 8	2	
6	970490904	WASHER,SPRING D 8	2	
7	970307368	ASSY COCK,JET START	1	
8	970307768	ASSY PUMP,FUEL	1	
9	970307110	COMP.DIAPHRAGM NA	1	
10	970492513	STUD, M 6X 16	2	
11	970492512	GASKET,FUEL PUMP	1	
12	970151133	NUT,M 6	2	
13	970119149	WASHER, SPRING D 6	2	
14	970141326	WASHER, PLAIN D6	2	

nannidiesel energy in blue

Nanni Industries S.A.
Z.I. - B.P. 107 11, Avenue Mariotte 33260 La Teste

Web: http://www.nannidiesel.com
Tel. 33 (0) 5 56 22 30 60
Fax. 33 (0) 5 56 22 30 79

Brand: NanniDiesel

Model: Moteur 5.250TDI

Version: Standard

Subassembly: Injection lines nozzles

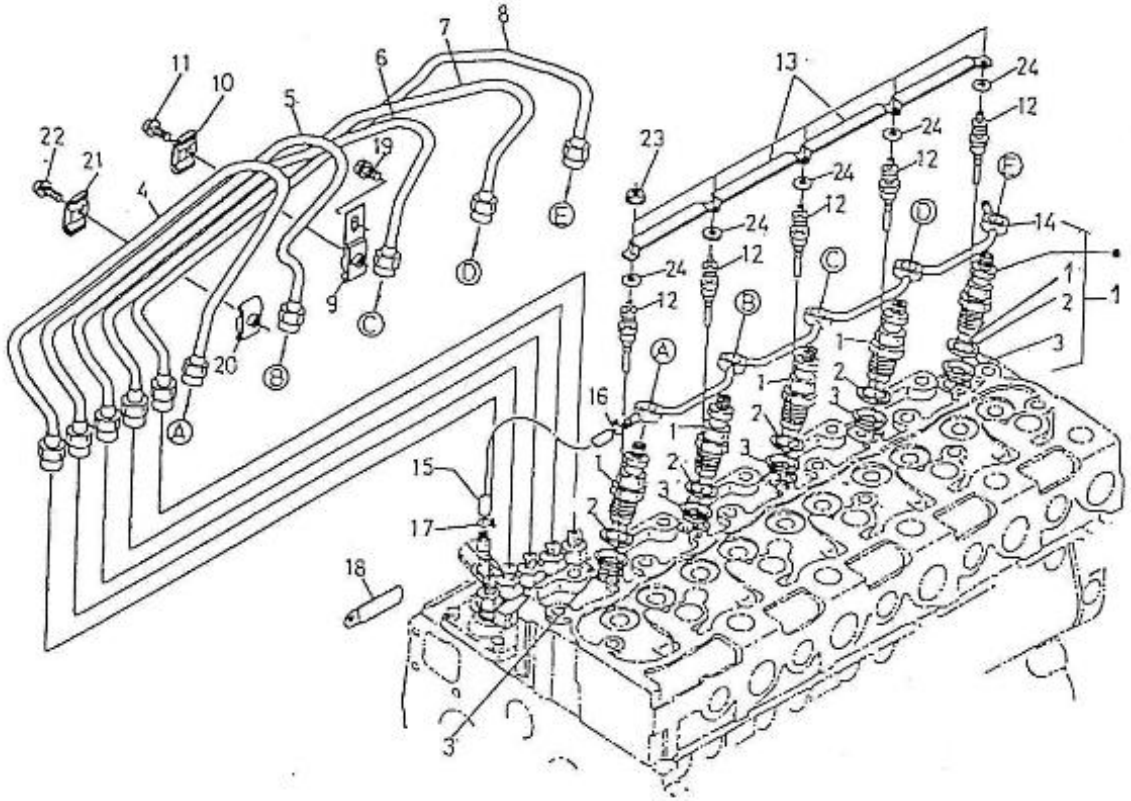

N.	Item	Description	Qty	Notes
1	970307395	PIECE,NOZZLE	5	
1	970310467	KIT,NOZZLE HOLDER	5	
2	970142109	GHASKET, RING INJECTORS	5	
3	970307388	SEAL,HEAT	5	
4	970310468	PIPE,INJECTION 1	1	
5	970310469	PIPE,INJECTION 2	1	
6	970310470	PIPE,INJECTION 3	1	
7	970310471	PIPE,INJECTION 4	1	
8	970310472	PIPE,INJECTION 5	1	
9	970310472	PIPE,INJECTION 5	3	
10	970142115	CLAMP,FUEL-LINES 1+2	3	
11	970492118	SCREW,M 5X 20 ROUND HEAD	3	
12	970307393	GLOW PLUG	5	
13	970310474	CORD,GLOW PLUG	1	
14	970307759	ASSY PIPE,OVER FLOW	1	
15	32805001	HOSE	1	
16	970310171	CLAMP	1	
17	970310171	CLAMP	1	
18	970310476	CLAMP,CORD	1	
19	970310477	SCREW,WITH WASHER	3	
20	970142114	CLAMP,FUEL LINES 1+2	5	
21	970142115	CLAMP,FUEL-LINES 1+2	5	
22	970492118	SCREW,M 5X 20 ROUND HEAD	5	
23	970307593	NUT,FLANGE	5	
24	970307594	WASHER,PLAIN	5	

nannidiesel energy in blue

Nanni Industries S.A.
Z.I. - B.P. 107 11, Avenue Mariotte 33260 La Teste

Web: http://www.nannidiesel.com
Tel. 33 (0) 5 56 22 30 60
Fax. 33 (0) 5 56 22 30 79

Brand: NanniDiesel

Model: Moteur 5.250TDI

Version: Standard

Subassembly: Fuel filter Assy.

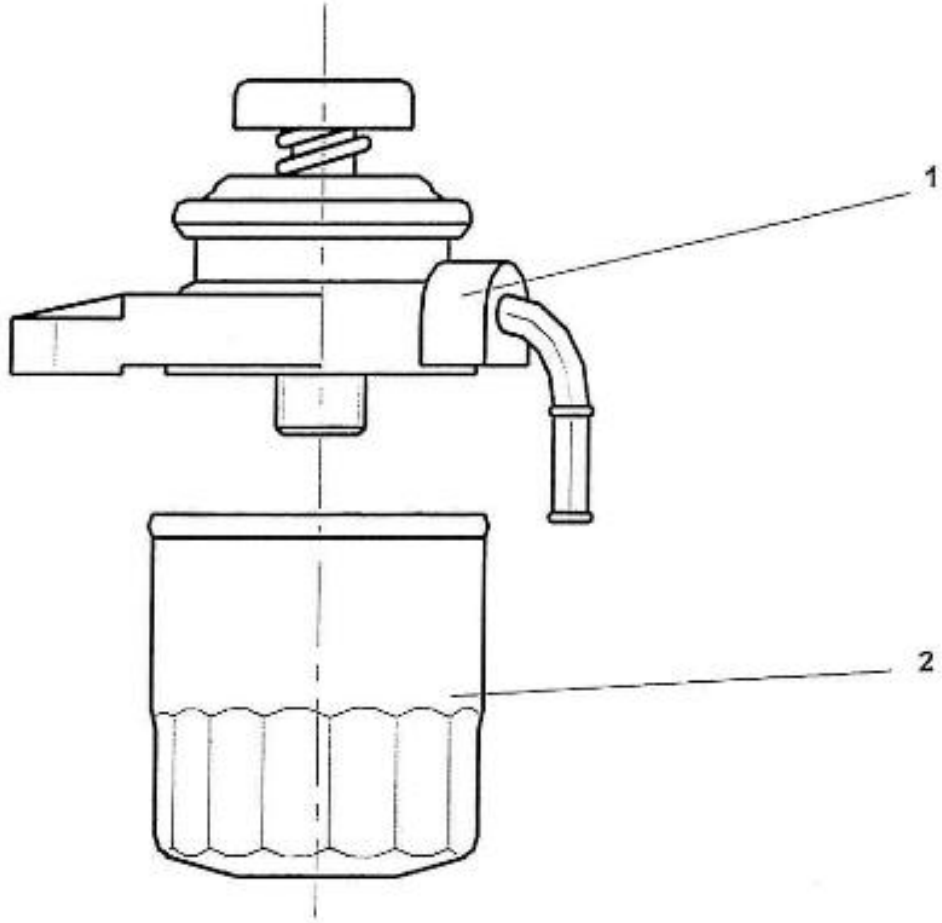

N.	Item	Description	Qty	Notes
1	970310293	FUEL FILTER	1	
2	970310302	FILTER	1	

nannidiesel
energy in blue

Nanni Industries S.A.
Z.I. - B.P. 107 11, Avenue Mariotte 33260 La Teste

Web: http://www.nannidiesel.com
Tel. 33 (0) 5 56 22 30 60
Fax. 33 (0) 5 56 22 30 79

Brand: NanniDiesel

Model: Moteur 5.250TDI

Version: Standard

Subassembly: Injection pump component parts

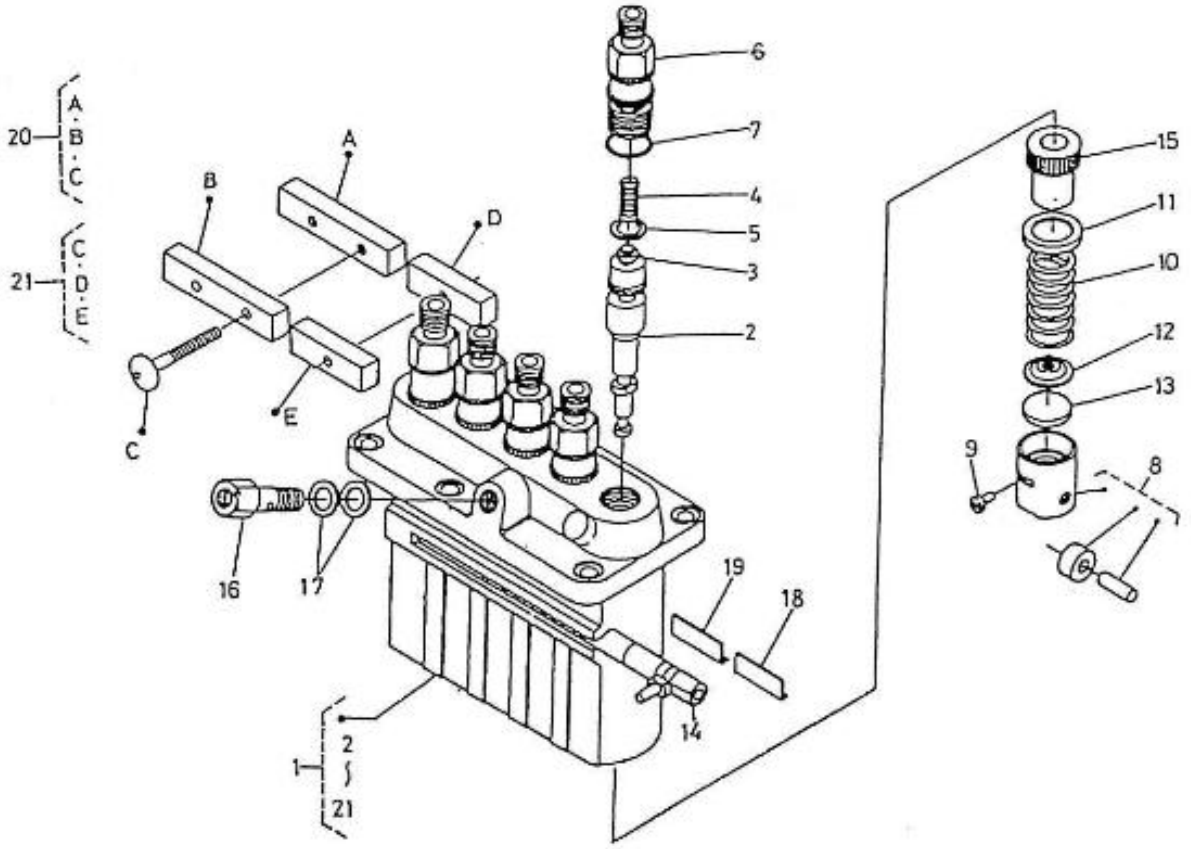

N.	Item	Description	Qty	Notes
1	970307945	ASSY PUMP,INJECTION	1	
2	970307947	ASSY PLUNGER	5	
3	970307948	VALVE,DELIVERY.	5	
4	970307949	SPRING,DELIV.VALVE	5	
5	970310457	SEAL	5	
6	970307372	HOLDER,DELIV.VALVE	5	
7	970307822	O RING	5	
8	970303985	TAPPET,INJ.PUMP CPL.	5	
9	970307374	PIN,TAPPET GUIDE	5	
10	970303982	SPRING,PLUNGER	5	
11	970303981	SEAT,SPRING -UPPER-	5	
12	970303983	SEAT,SPRING -LOWER-	5	
13	970303753	SHIM	5	
14	970307754	RACK,CONTROL	1	
15	970303980	SLEEVE,CONTROL	5	
16	970302107	SCREW,INJ.PUMP	1	
17	970307379	WASHER,NIPPLE	2	
18	970307375	PLATE	1	
19	970310458	PLATE	1	
20	970307373	ASSY LOCK PLATE	1	
21	970307756	ASSY PLATE,LOCK	1	

nannidiesel energy in blue

Nanni Industries S.A.
Z.I. - B.P. 107 11, Avenue Mariotte 33260 La Teste

Web: http://www.nannidiesel.com
Tel. 33 (0) 5 56 22 30 60
Fax. 33 (0) 5 56 22 30 79

Brand: NanniDiesel

Model: Moteur 5.250TDI

Version: Standard

Subassembly: Engine stop lever

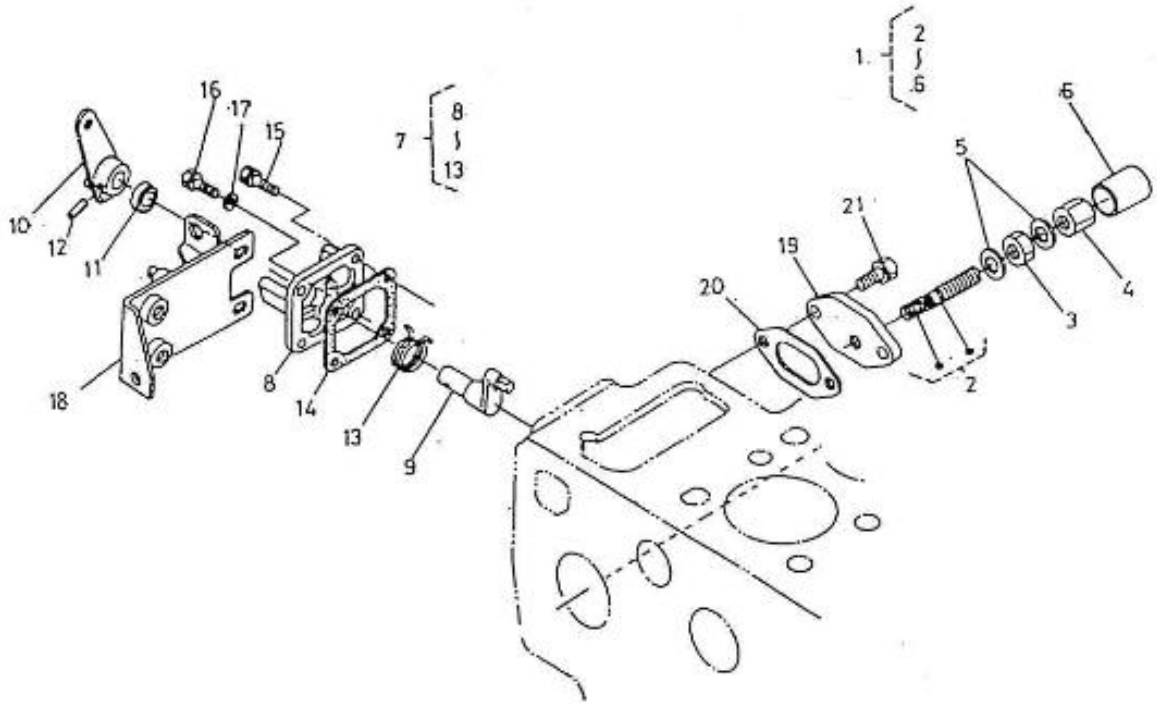

N.	Item	Description	Qty	Notes
1	970307354	APPARATUS,IDLING	1	
2	970307356	ASSY BOLT,ADJUSTING	1	
3	970303906	NUT	1	
4	970307355	NUT,CAP	1	
5	970491131	WASHER,SEAL	2	
6	970302069	CAP	1	
7	970307942	ASSY LEVER,ENG.STOP	1	
8	970307943	COVER,INJECTION PUMP	1	
9	970307944	SHAFT,LEVER	1	
10	970307360	LEVER,ENGINE STOP	1	
11	970302861	SEAL,OIL	1	
12	970151130	PIN,SPRING RETAINER	1	
13	970307361	SPRING,RETURN	1	
14	970310448	GASKET,PUMP COVER NA	1	
15	970490119	BOLT,M 6X 18	2	
16	970141537	BOLT, M6X22	2	
17	970141326	WASHER, PLAIN D6	2	
18	970307366	SUPPORT,SOLENOID	1	
19	970302930	COVER	1	
20	970310450	GASKET,BREATHER NA	1	
21	970491117	BOLT,M 6X 16	2	

nannidiesel energy in blue

Nanni Industries S.A.
Z.I. - B.P. 107 11, Avenue Mariotte 33260 La Teste

Web: http://www.nannidiesel.com
Tel. 33 (0) 5 56 22 30 60
Fax. 33 (0) 5 56 22 30 79

Brand: NanniDiesel

Model: Moteur 5.250TDI

Version: Standard

Subassembly: Governor

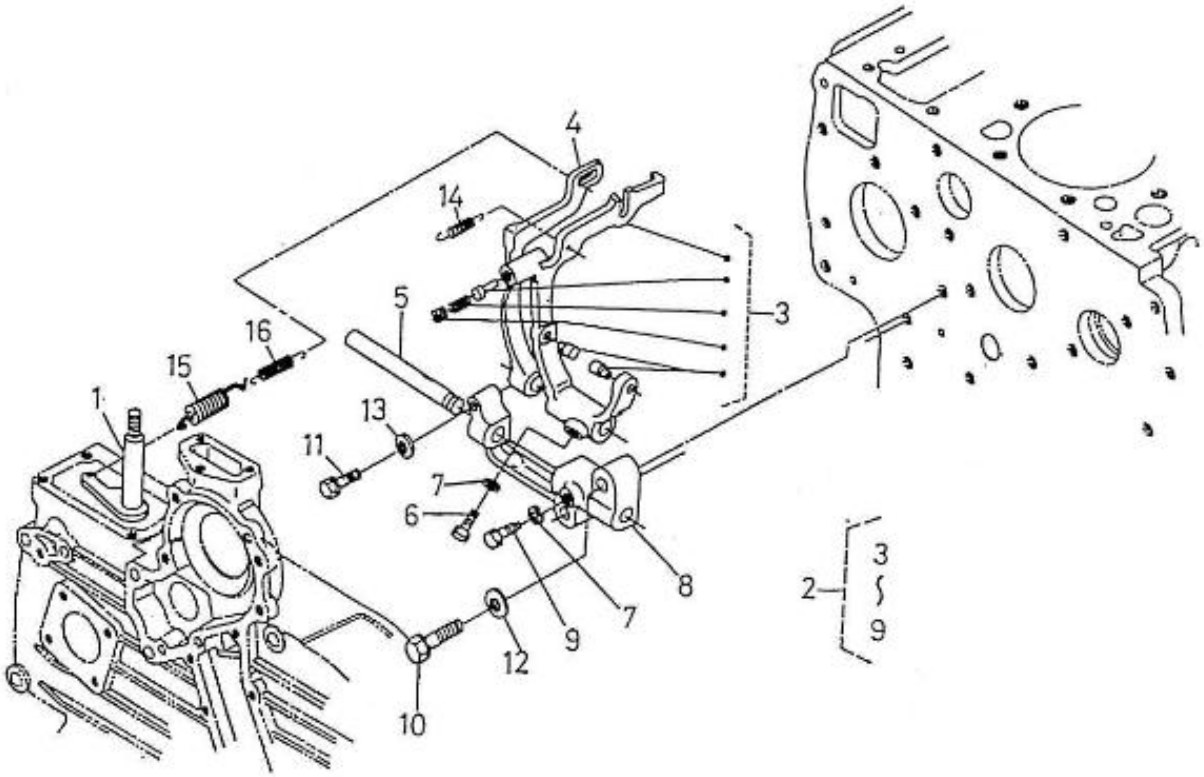

N.	Item	Description	Qty	Notes
1	970302030	LEVER,GOVERNOR	1	
2	970310459	ASSY LEVER,FORK	1	
3	970310460	COMP.LEVER,FORK	1	
5	970302034	SHAFT,FORK LEVER	1	
6	970302035	BOLT	1	
7	970119149	WASHER, SPRING D 6	2	
8	970302036	SUPPORT,FORK LEVER	1	
9	970490520	BOLT	1	
10	970302037	BOLT,M 8X 32	2	
11	970491323	BOLT,M 6X 28	1	
12	970301933	WASHER,PLAIN D 8	2	
13	970141326	WASHER, PLAIN D6	1	
14	970310462	SPRING,START	1	
15	970310463	SPRING,GOVERNOR	1	
16	970307384	SPRING.GOVERNOR 2	1	

nannidiesel energy in blue

Nanni Industries S.A.
Z.I. - B.P. 107 11, Avenue Mariotte 33260 La Teste

Web: http://www.nannidiesel.com
Tel. 33 (0) 5 56 22 30 60
Fax. 33 (0) 5 56 22 30 79

Brand: NanniDiesel

Model: Moteur 5.250TDI

Version: Standard

Subassembly: Fresh water pump

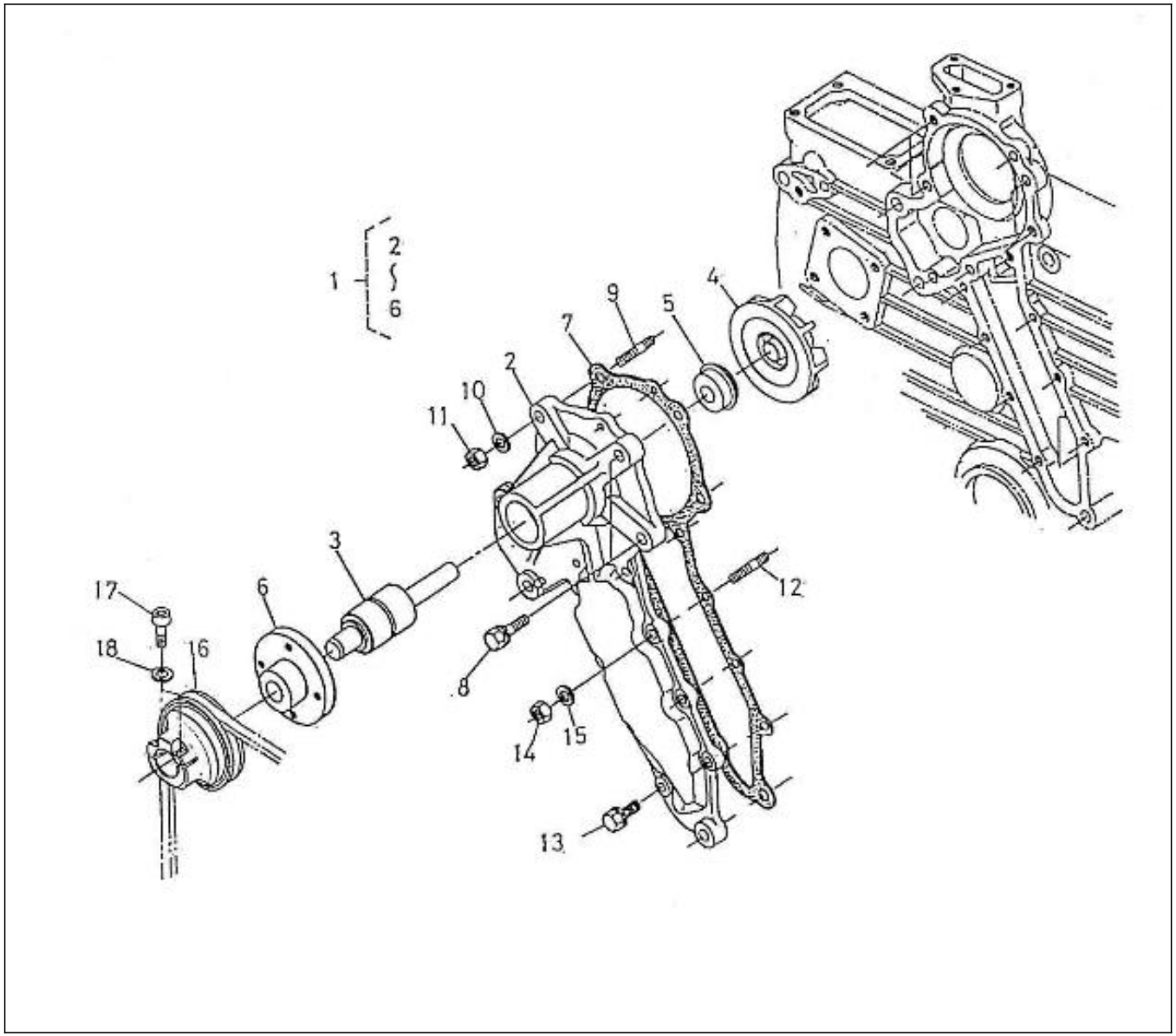

N.	Item	Description	Qty	Notes
1	970310485	ASSY PUMP,WATER	1	
2	970310486	BODY,WATER PUMP	1	
3	970302109	BEARING,SHAFT W/PUMP	1	
4	970310487	IMPELLER,WATER PUMP	1	
5	970310488	ASSY SEAL,MECHANICAL	1	
6	970302113	FLANGE,F/WATER PUMP	1	
7	970310489	GASKET,WATER PUMP NA	1	
8	970301986	BOLT,M 8X 28	2	
9	970303943	STUD,M 8X 22	2	
10	970490904	WASHER,SPRING D 8	2	
11	970490903	NUT,M 8	2	
12	970490224	STUD	1	
13	970490119	BOLT,M 6X 18	8	
14	970151133	NUT,M 6	1	
15	970310417	WASHER,SPRING	1	
16	95312183	PULLEY	1	
17	970634037	BOLT,SOCK M 6X 30	2	
18	970609602	WASHER,CORRUGATED D 6	2	

nannidiesel energy in blue

Nanni Industries S.A.
Z.I. - B.P. 107 11, Avenue Mariotte 33260 La Teste

Web: http://www.nannidiesel.com
Tel. 33 (0) 5 56 22 30 60
Fax. 33 (0) 5 56 22 30 79

Brand: NanniDiesel

Model: Moteur 5.250TDI

Version: Standard

Subassembly: Turbocharger, Exh. Mixer

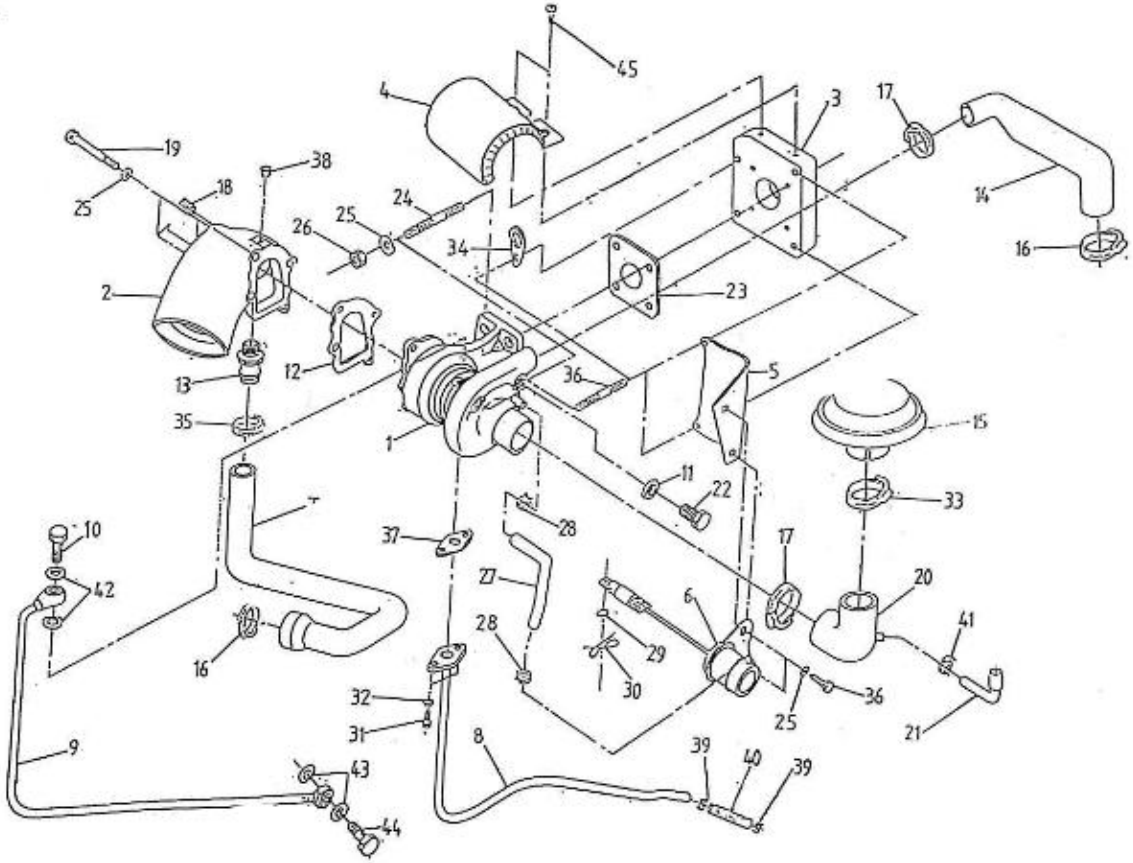

N.	Item	Description	Qty	Notes
1	970310500	TURBO CHARGER	1	
2	665700062	MIXER	1	
3	95310312	FLANGE	1	
4	95310315	TURBO COVER	1	
5	95203029	BRACKET	1	
6	970310547	WASTEGATE 5.250 TDI	1	
7	48328059	HOSE	1	
8	51306098	PIPE	1	
9	51306099	PIPE	1	
10	970310505	BOLT,EYE JOINT	1	
11	970300288	GASKET,M8	2	
12	970310502	GASKET NA	1	
13	970892303	SOCKET,HOSE	1	
14	48328057	HOSE	1	
15	970310272	COVER	1	
16	970634621	CLAMP,HOSE 44-56	2	
17	970604533	CLAMP,HOSE 32-44	1	
18	970310264	PLUG	1	
19	970301280	BOLT,HEX M 8X 90	3	
19	970647316	BOLT,HEX M 8X 35	1	
20	970310280	HOSE	1	
21	48328069	HOSE	1	
22	970832061	BOLT	2	
23	970310501	GASKET NA	1	
24	970300080	STUD,M 8X 25	5	
25	970119138	WASHER,SPRING D 8	8	
26	970027322	NUT,M 8	8	
27	970310548	HOSE	1	
28	970439306	CLAMP,HOSE 11-17	2	
29	970635459	WASHER,PLAIN D 6	1	
30	970300292	PIN,COTTER 1,6X25	1	
31	970491536	BOLT,M 6X 20	2	
32	970491536	BOLT,M 6X 20	2	
33	970634621	CLAMP,HOSE 44-56	1	
34	970490901	HOOK,ENGINE 2.60-3.90-4.110	1	
35	970604533	CLAMP,HOSE 32-44	1	
36	970300374	STUD,M 8X 30	3	
37	970310508	GASKET NA	1	
38	970307265	PLUG,HEX 1/8	1	
39	970310510	CLAMP,HOSE	2	
40	970310509	PIPE,OIL	1	
41	970301604	CLAMP,HOSE 15-24	1	
42	970310506	GASKET,COPPER	2	
43	970491131	WASHER,SEAL	2	
44	970310504	BOLT,EYE JOINT	1	
45	970609601	BOLT,HEX M 6X 12	2	

nannidiesel energy in blue

Nanni Industries S.A.
Z.I. - B.P. 107 11, Avenue Mariotte 33260 La Teste

Web: http://www.nannidiesel.com
Tel. 33 (0) 5 56 22 30 60
Fax. 33 (0) 5 56 22 30 79

Brand: NanniDiesel

Model: Moteur 5.250TDI

Version: Standard

Subassembly: Heat exchanger exh. Manifold

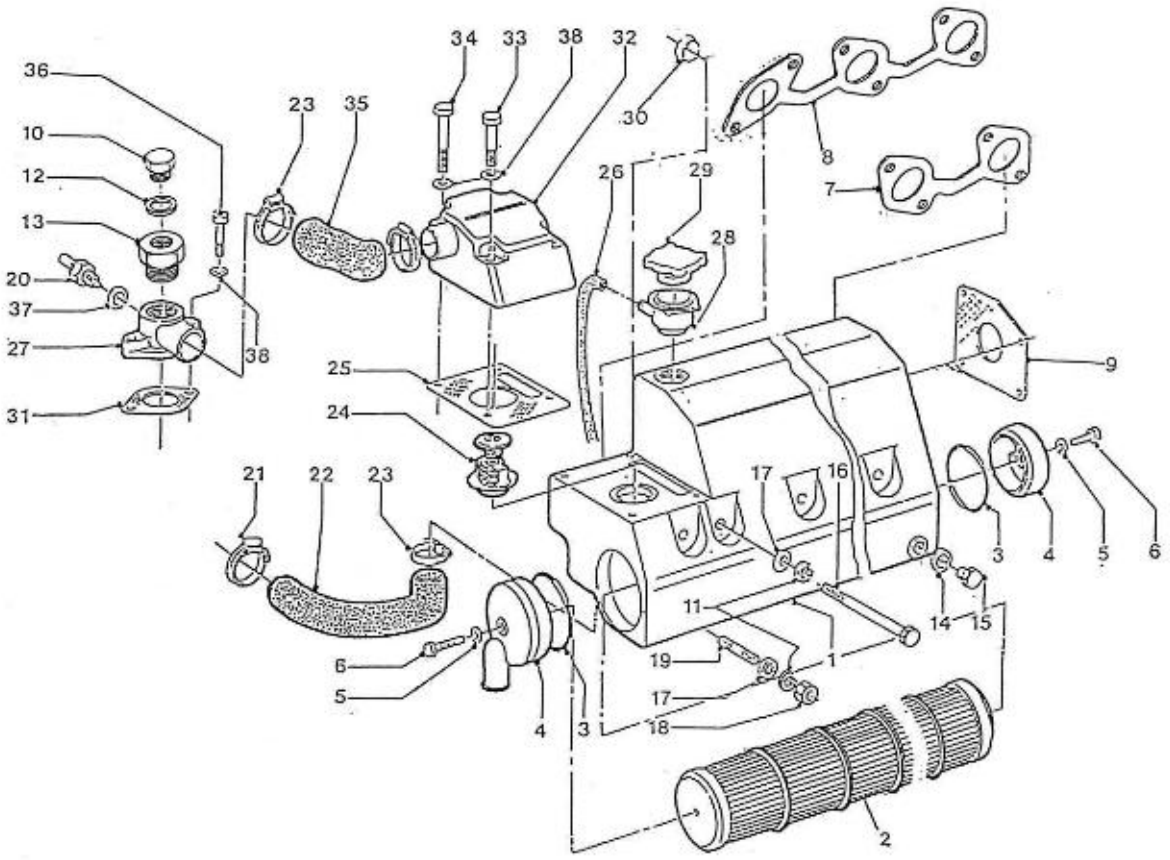

N.	Item	Description	Qty	Notes
1	970307951	HOUSING,HEATEXCHANGER	1	
2	970307503	TUBE,STACK	1	
3	970301719	O-RING,68,00X4,00	2	
4	970307714	COVER	2	
5	970300288	GASKET,M8	2	
6	970301263	BOLT,M 8X 45 -A2-	2	
7	970310495	GASKET,E-MANIFOLD NA	1	
8	970310496	GASKET,E-MANIFOLD NA	1	
9	970301710	GASKET,MIXER 4.190	1	
10	970639853	"PLUG,HEX 3/8""G"	1	
11	970119138	WASHER,SPRING D 8	12	
12	970300289	GASKET,RING D17	1	
13	970307656	PLUG,HEX 36/150	1	
14	970300306	GASKET,RING D14	1	
15	970875506	PLUG	1	
16	970301703	BOLT,HEX M 8X160	5	
17	970027323	WASHER,PLAIN D 8	10	
18	970027322	NUT,M 8	5	
19	970300374	STUD,M 8X 30	5	
20	970851602	WATER TEMPERATURE SENDER	1	
21	970604533	CLAMP,HOSE 32-44	1	
22	970310281	HOSE	1	
23	970300922	CLAMP,HOSE 26-38	3	
24	970307282	THERMOSTAT	1	
25	970301408	GASKET,THERMOSTAT COVER	1	
26	970300077	HOSE,D 8 L= 450	1	
27	970301711	FLANGE,WATER INTAKE 4.190	1	
28	970307176	FILLING NECK	1	
29	970604614	CAP,FILLING 0, 7 DOUBLE SEAL	1	
30	970494517	CAP,FREEZE	2	
31	970301730	GASKET,FLANGE	1	
32	970301403	COVER,THERMOSTAT	1	
33	970300409	BOLT,HEX M 8X 55	2	
34	970300261	BOLT,HEX M 8X 80	2	
35	48328068	HOSE	1	
36	970635916	BOLT,SOCK M 8X 35	2	
37	970300306	GASKET,RING D14	1	
38	970119139	WASHER,CORRUGATED D8	6	
39	970307950	HEATEXCHANGER	1	

nannidiesel energy in blue

Nanni Industries S.A.
Z.I. - B.P. 107 11, Avenue Mariotte 33260 La Teste

Web: http://www.nannidiesel.com
Tel. 33 (0) 5 56 22 30 60
Fax. 33 (0) 5 56 22 30 79

Brand: NanniDiesel

Model: Moteur 5.250TDI

Version: Standard

Subassembly: Seawater pump Ass

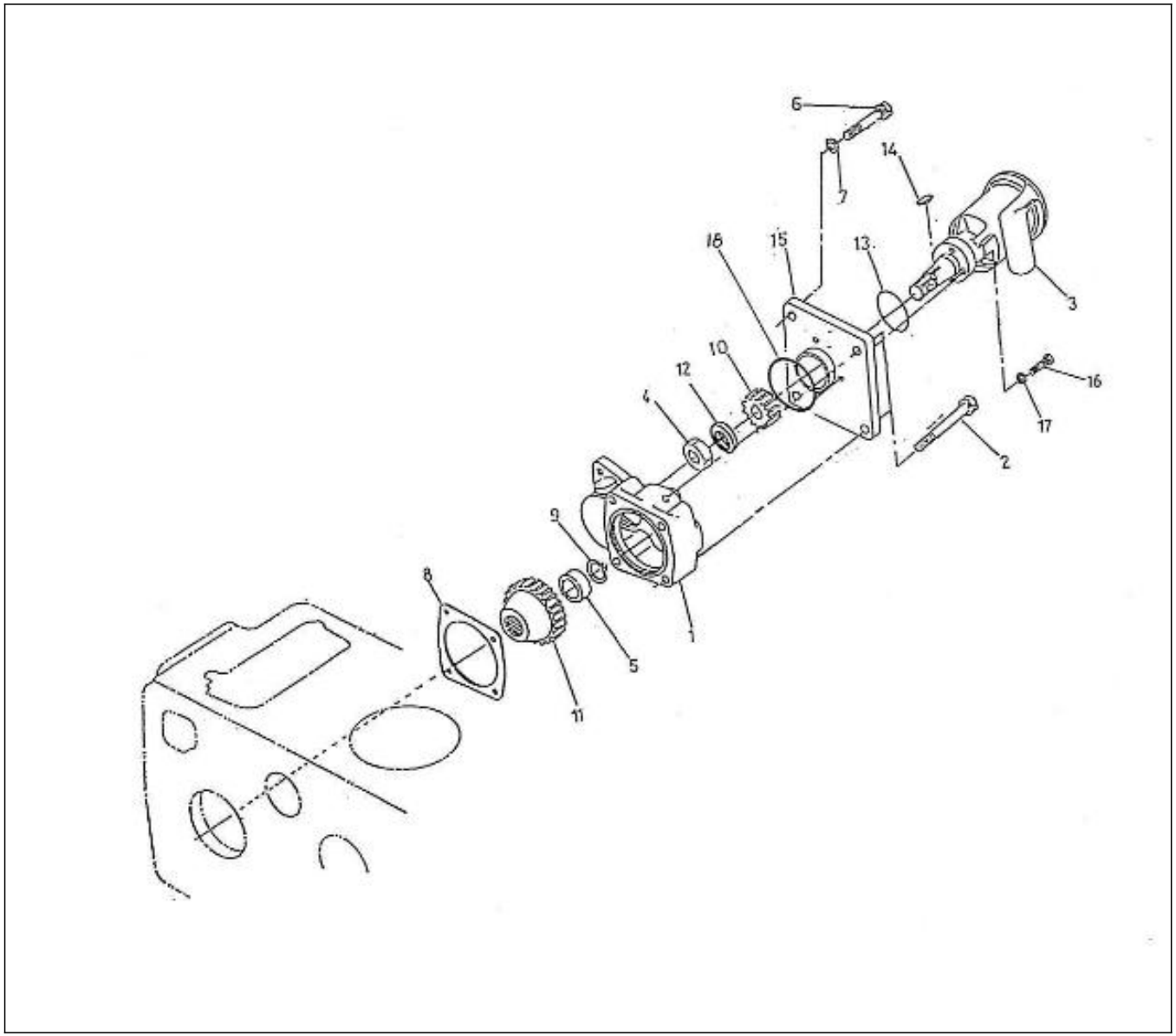

N.	Item	Description	Qty	Notes
1	970310511	BASE,OIL PUMP	1	
2	970644594	BOLT,HEX M 8X 60	2	
3	970310267	PUMP,WATER	1	
4	970647607	NUT,M12 LOW	1	
5	970310515	SPACER	1	
6	970119141	BOLT,HEX M8X 20	2	
7	970119139	WASHER,CORRUGATED D8	4	
8	970310513	GASKET	1	
9	970303933	CIR-CLIP,EXTERNAL	1	
10	970310516	GEAR,INJ.PUMP	1	
11	970310512	GEAR,INJ.PUMP	1	
12	970647606	WASHER,CORRUGATED D12	1	
13	970310557	O-RING	1	
14	970310588	SOLENOID STOP	1	
15	95312181	FLANGE	1	
16	970644006	BOLT,HEX M 6X 20	4	
17	970609602	WASHER,CORRUGATED D 6	4	
18	970310660	O RING	1	

nannidiesel energy in blue

Nanni Industries S.A.
Z.I. - B.P. 107 11, Avenue Mariotte 33260 La Teste

Web: http://www.nannidiesel.com
Tel. 33 (0) 5 56 22 30 60
Fax. 33 (0) 5 56 22 30 79

Brand: NanniDiesel

Model: Moteur 5.250TDI

Version: Standard

Subassembly: Sea water pump spare parts

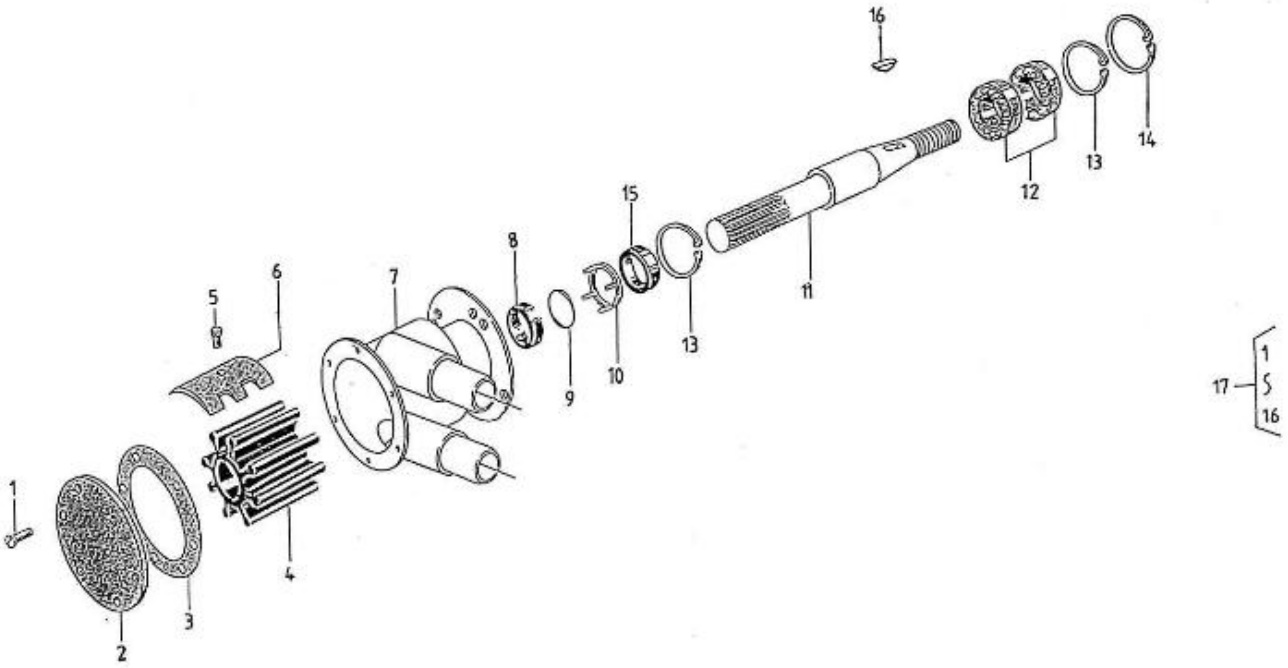

N.	Item	Description	Qty	Notes
1	970304048	SCREW,CAM WATER PUMP	6	
2	970614623	COVER,END F7B-803	1	
3	970614616	GASKET,F7B	1	
4	970544310	IMPELLER,WATER PUMP F 7B-803	1	
5	970614622	SCREW,CAM WATER PUMP F7B-803	1	
6	970614621	CAM,WATER PUMP F7B-803	1	
7	970310560	BODY,WATER PUMP	1	
8	970614516	RING,SEAL OIL W/PUMP F5B-9000	1	
9	970614626	O-RING,WATER PUMP F7B-9/10	2	
10	970614624	WASHER,WATER PUMP F7B-9/10	1	
11	970310559	PUMP SHAFT	1	
12	970614617	BEARING,CASE	2	
13	970614627	RING,RETAINING	1	
14	970304049	CIR-CLIP	1	
15	970310561	SEAL	1	
16	970310558	KEY	1	
17	970310267	PUMP,WATER	1	
18	970301804	REPAIR KIT	1	

nannidiesel energy in blue

Nanni Industries S.A.
Z.I. - B.P. 107 11, Avenue Mariotte 33260 La Teste

Web: http://www.nannidiesel.com
Tel. 33 (0) 5 56 22 30 60
Fax. 33 (0) 5 56 22 30 79

Brand: NanniDiesel

Model: Moteur 5.250TDI

Version: Standard

Subassembly: Intaket manifold

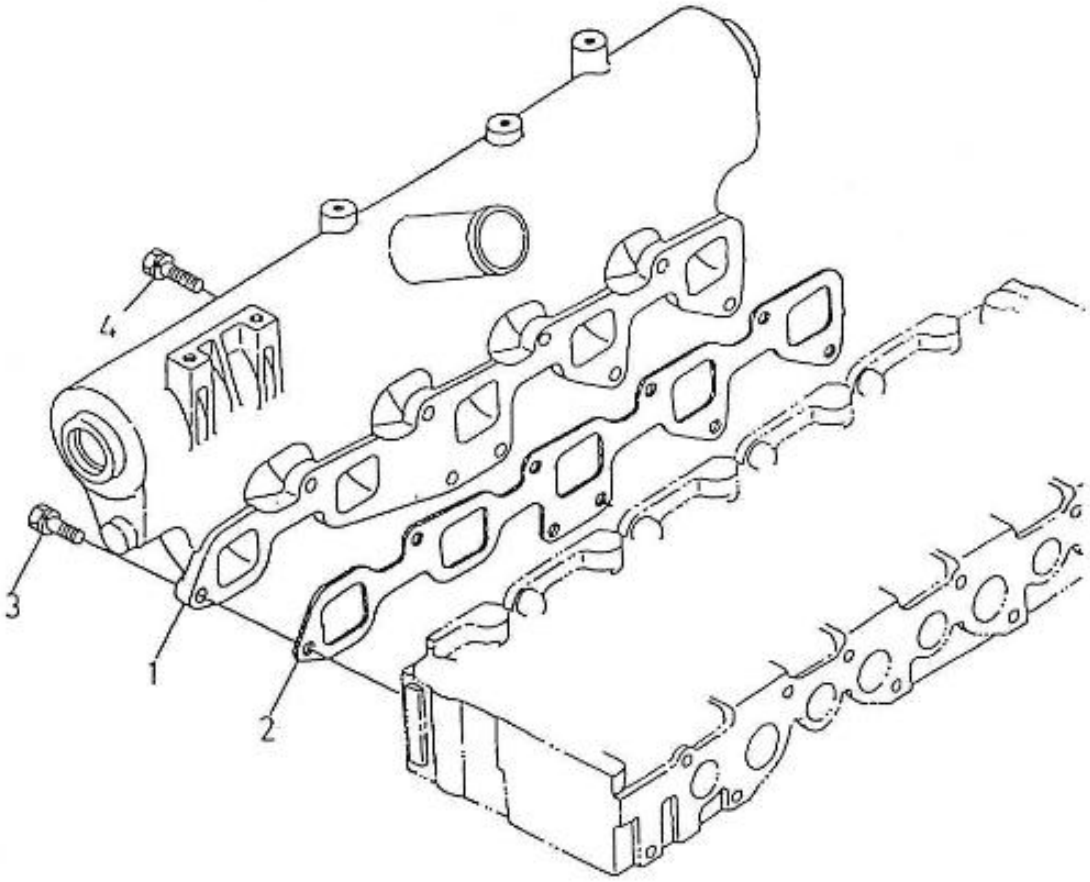

N.	Item	Description	Qty	Notes
1	970310497	MANIFOLD,INLET	1	
2	970310498	GASKET,MANIFOLD NA	1	
3	970492138	BOLT,M 8X 22	7	
4	970310499	BOLT	2	

nannidiesel energy in blue

Nanni Industries S.A.
Z.I. - B.P. 107 11, Avenue Mariotte 33260 La Teste

Web: http://www.nannidiesel.com
Tel. 33 (0) 5 56 22 30 60
Fax. 33 (0) 5 56 22 30 79

Brand: NanniDiesel

Model: Moteur 5.250TDI

Version: Standard

Subassembly: Intercooler

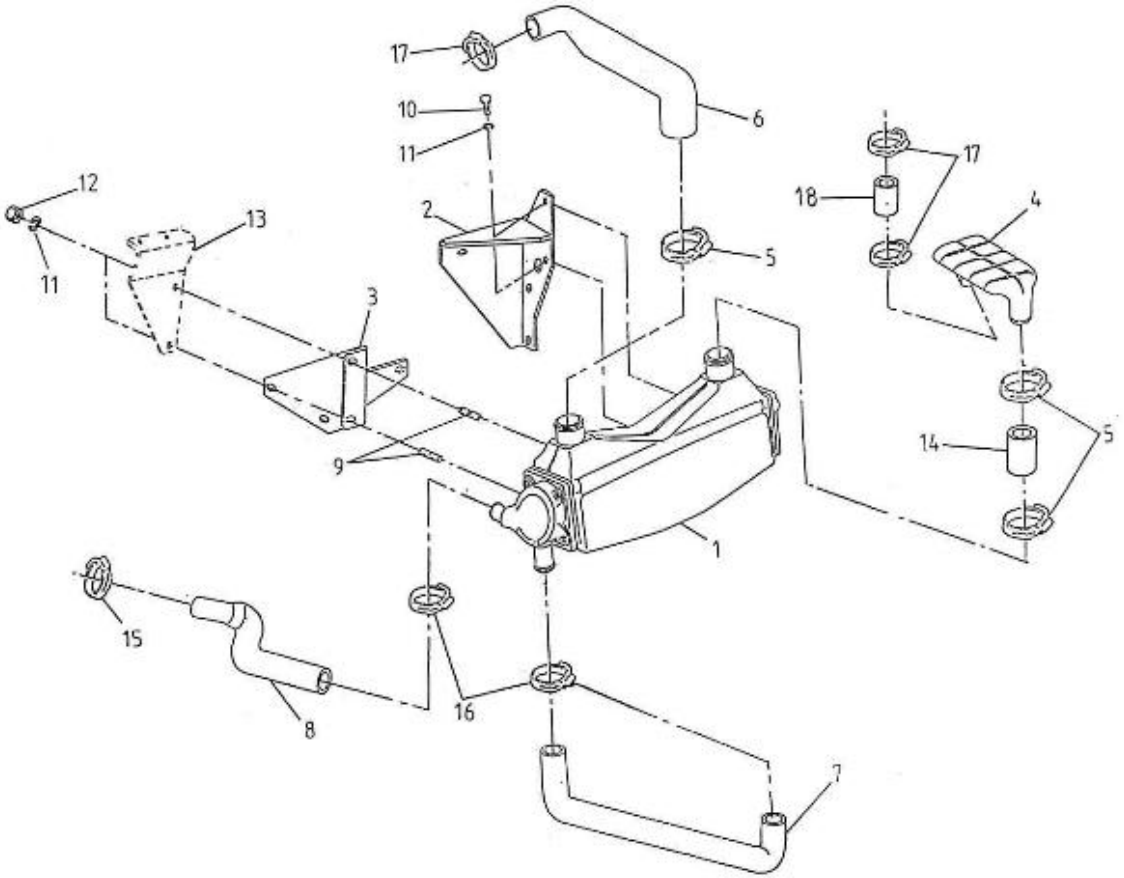

N.	Item	Description	Qty	Notes
1	48300362	INTERCOOLER	1	
2	95310309	BRACKET	1	
3	95310310	BRACKET	1	
4	665700063	INLET PIPE	1	
5	970634621	CLAMP,HOSE 44-56	3	
6	48328057	HOSE	1	
7	48328061	HOSE	1	
8	48328058	HOSE	1	
9	970621020	STUD,M10X 22	2	
10	970635508	BOLT,HEX M10X 25	2	
11	970119137	WASHER,CORRUGATED D10	4	
12	970027322	NUT,M 8	2	
13	95310306	SUPPORT FUEL FILTER	1	
14	51850001	HOSE	1	
15	970604526	CLAMP,HOSE 22-32	1	
16	970300922	CLAMP,HOSE 26-38	3	
17	970604533	CLAMP,HOSE 32-44	3	
18	970644591	HOSE,D40 L= 40	1	

nannidiesel energy in blue

Nanni Industries S.A.
Z.I. - B.P. 107 11, Avenue Mariotte 33260 La Teste

Web: http://www.nannidiesel.com
Tel. 33 (0) 5 56 22 30 60
Fax. 33 (0) 5 56 22 30 79

Brand: NanniDiesel

Model: Moteur 5.250TDI

Version: Standard

Subassembly: Intercooler spare parts

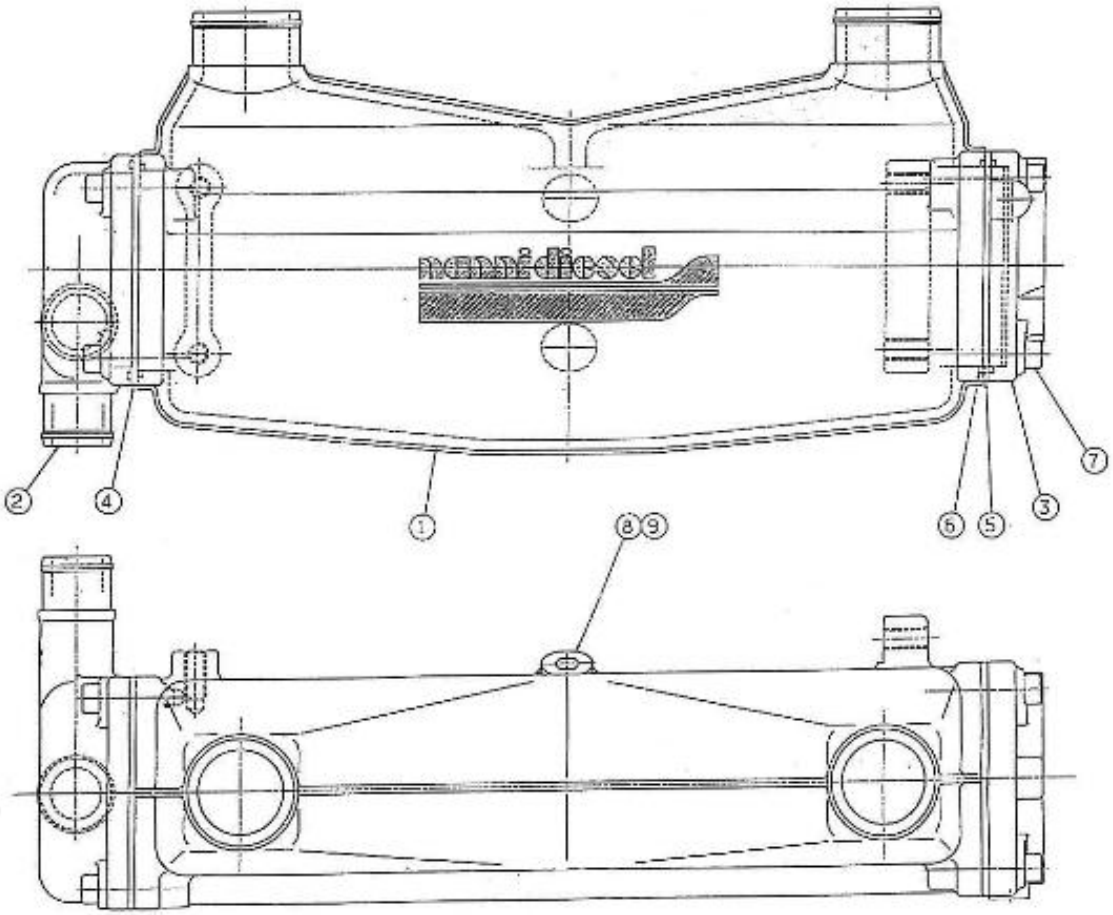

N.	Item	Description	Qty	Notes
1	970310549	HOUSING, INTERCOOLER	1	
2	970310550	COVER	1	
3	970310551	COVER	1	
4	970310552	TUB STACK	1	
5	970310553	SPACER	1	
6	970310554	O-RING	4	
7	970635916	BOLT,SOCK M 8X 35	8	
8	970310555	CAP,FREEZE	2	
9	970310556	BALL	2	

nannidiesel energy in blue

Nanni Industries S.A.
Z.I. - B.P. 107 11, Avenue Mariotte 33260 La Teste

Web: http://www.nannidiesel.com
Tel. 33 (0) 5 56 22 30 60
Fax. 33 (0) 5 56 22 30 79

Brand: NanniDiesel

Model: Moteur 5.250TDI

Version: Standard

Subassembly: Oil extraction pump

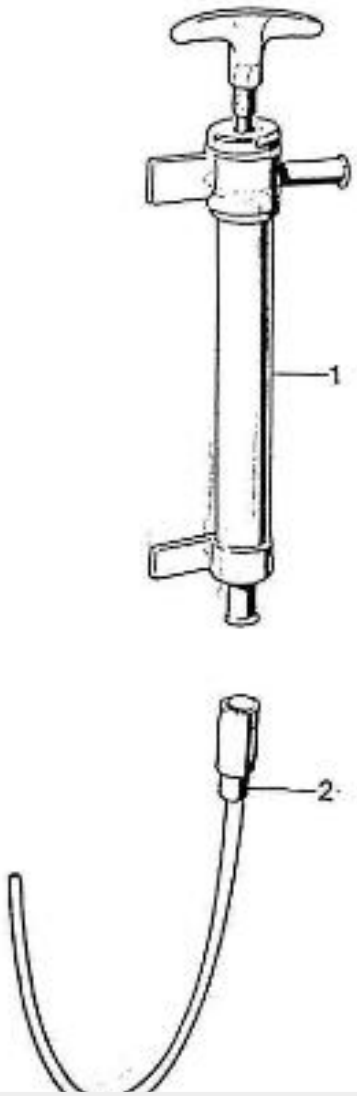

N.	Item	Description	Qty	Notes
1	970439302	PUMP,OIL EXTRACTION	1	
2	970310401	PIPE	1	

nannidiesel energy in blue

Nanni Industries S.A.
Z.I. - B.P. 107 11, Avenue Mariotte 33260 La Teste

Web: http://www.nannidiesel.com
Tel. 33 (0) 5 56 22 30 60
Fax. 33 (0) 5 56 22 30 79

Brand: NanniDiesel

Model: Moteur 5.250TDI

Version: Standard

Subassembly: Starter motor

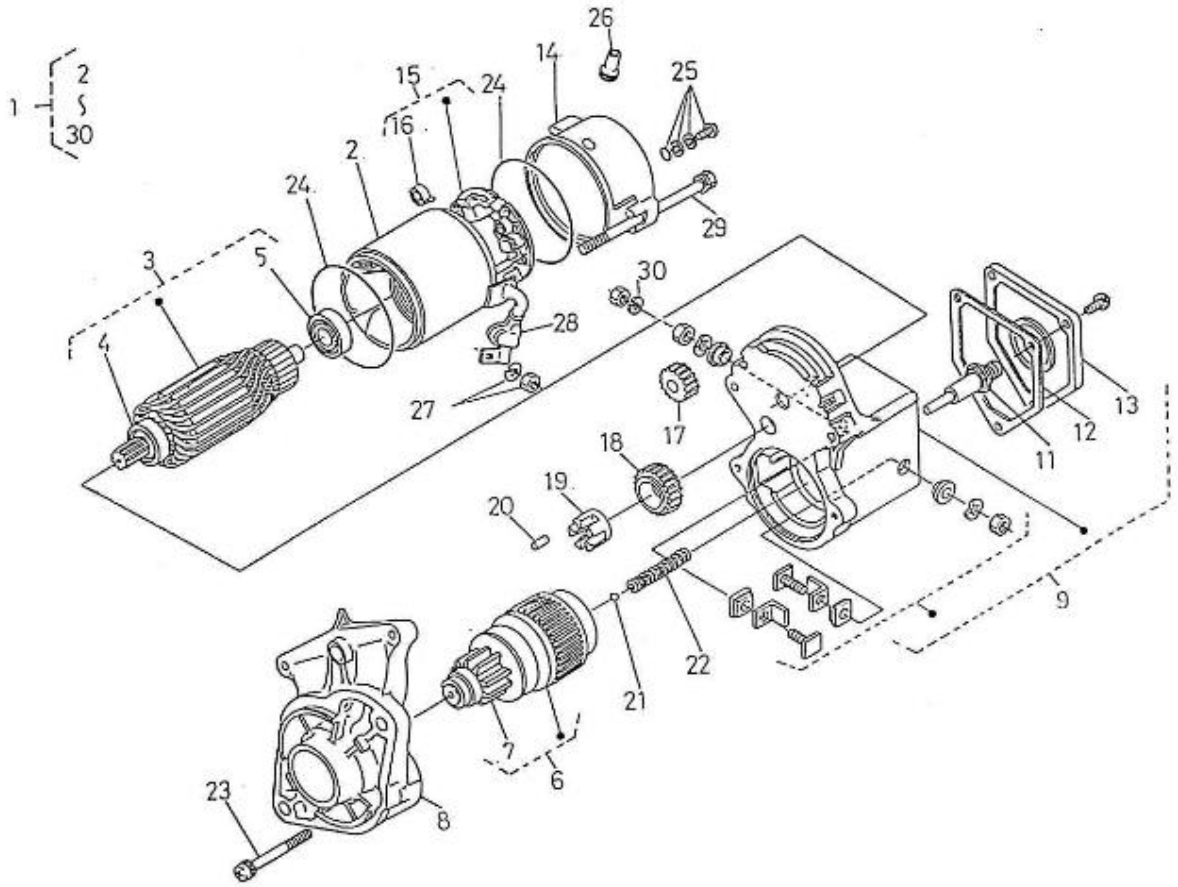

N.	Item	Description	Qty	Notes
1	970302070	STARTER,MOTOR 12V 0,8KW	1	
2	970303986	HOUSING,ROTOR	1	
3	970303987	ROTOR,STARTER 6.280	1	
4	970303988	GASKET,RING	1	
5	970307787	BEARING,BALL(RADIAL)	1	
6	970303994	PINION,SWITCH	1	
7	970307788	PIGNON	1	
8	970303995	FRAME,DRIVE END-STARTER MOTOR	1	
9	970303991	HOLDER,MAGNETIC SWITCH	1	
10	970303991	HOLDER,MAGNETIC SWITCH	1	
11	970307789	PLUNGER	1	
12	970307790	GASKET	1	
13	970307791	COUVERCLE	1	
14	970307792	FRAME,END	1	
15	970303989	HOLDER,BRUSH	1	
16	970517318	SPRING,BRUSH	4	
17	970303992	GEAR,1	1	
18	970517313	GEAR,2 STARTER MOTOR 4.110	1	
19	970517315	BUSHING,PLASTIC (STARTER MOTOR	1	
20	970517314	ROLLER,STARTER MOTOR 4.110	5	
21	970517316	BHEARING,BALL STARTER MOTOR	1	
22	970517319	SPRING,STARTER MOTOR 4.110	1	
23	970303997	SCREW	2	
24	970303990	GASKET	1	
25	970307793	ASSY BOLT	2	
26	970307794	COVER	1	
27	970517324	NUT,STATER 4.110	1	
28	970303965	COVER,CORD	1	
29	970303996	BOLT	2	
30	970490904	WASHER,SPRING D 8	1	

nannidiesel energy in blue

Nanni Industries S.A.
Z.I. - B.P. 107 11, Avenue Mariotte 33260 La Teste

Web: http://www.nannidiesel.com
Tel. 33 (0) 5 56 22 30 60
Fax. 33 (0) 5 56 22 30 79

Brand: NanniDiesel

Model: Moteur 5.250TDI

Version: Standard

Subassembly: Alternator Assy.Std.

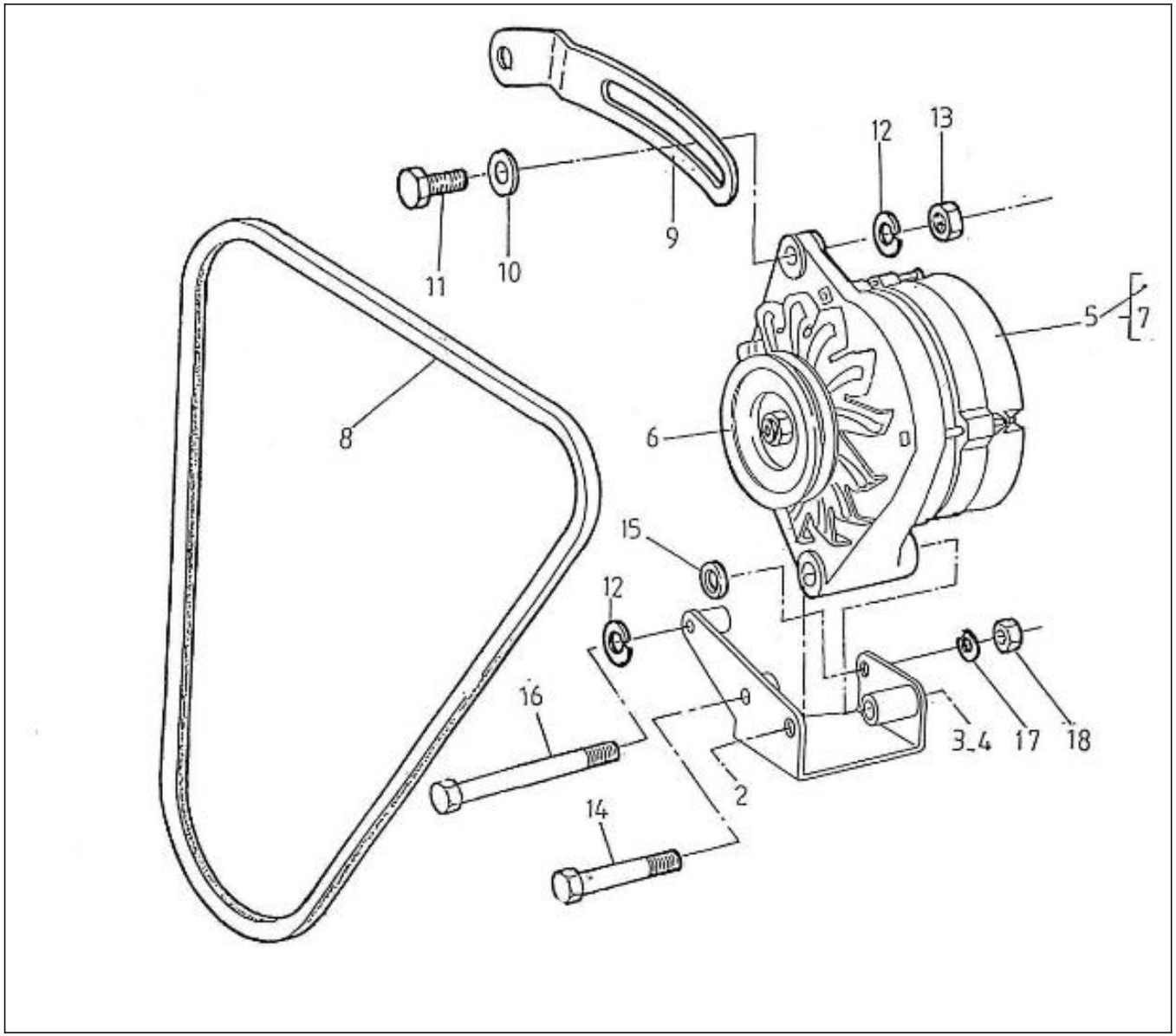

N.	Item	Description	Qty	Notes
1	970307438	SUPPORT,ALTERNATOR	1	
2	970307531	BOLT	1	
3	970039794	WASHER	1	
4	970307532	NUT	1	
5	970307522	ALTERNATOR,14V-60A	1	
6	970307521	PULLEY	1	
7	970307533	REGULATOR,ALTERNATOR	1	
8	970310301	V-BELT	1	
9	970307437	TIGHTENER,V-BELT	1	
10	970304050	WASHER	1	
11	970024016	BOLT,HEX M 8X 40	1	
12	970119138	WASHER,SPRING D 8	2	
13	970027322	NUT,M 8	1	
14	39160421	BOLT	1	
15	970307750	SPACER	1	
16	970300191	BOLT,HEX M 8X100	1	
17	970119136	WASHER,SPRING D10	1	
18	970119143	NUT, M10	1	

nannidiesel energy in blue

Nanni Industries S.A.
Z.I. - B.P. 107 11, Avenue Mariotte 33260 La Teste

Web: http://www.nannidiesel.com
Tel. 33 (0) 5 56 22 30 60
Fax. 33 (0) 5 56 22 30 79

Brand: NanniDiesel

Model: Moteur 5.250TDI

Version: Standard

Subassembly: A2 panel 1 instrument

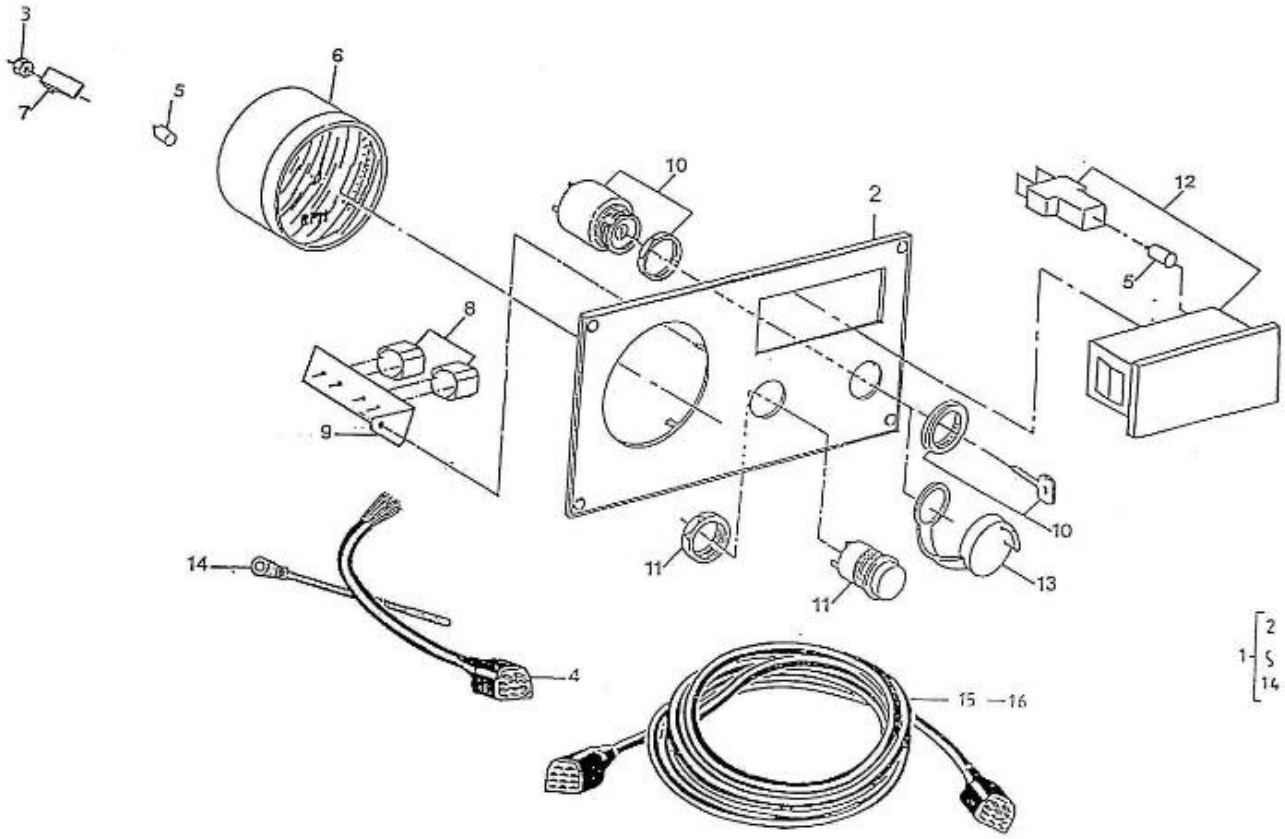

N.	Item	Description	Qty	Notes
1	674351	PANEL	1	
2	645200021	PLATE,PANEL	1	
3	970301191	NUT,M 4 A2	4	
4	970302662	WIRING,PANEL 1 INSTR. (11P	1	
5	970856011	BULB 12V-2W	5	
6	48200998	REVOLUTION COUNTER	1	
7	970300920	CLAMP,INSTRUMENTS	4	
8	970302684	BUZZER,SONITRON SMA 24A P17.05	2	
9	970310182	SUPPORT	1	
10	970302667	SWITCH,BOSCH STARTER + GLOWING	1	
11	970300967	BUTTON,PUSH	1	
12	970856005	LIGTH WARNING	1	
13	970304021	COVER	1	
14	970304019	CABLEBINDER,PLASTIC 4.8X195	1	
15	970302666	WIRING,INTERMEDIATE 8MTR 11POS	1	
16	970302665	WIRING,INTERMEDIATE 4MTR 11POS	1	

nannidiesel energy in blue

Nanni Industries S.A.
Z.I. - B.P. 107 11, Avenue Mariotte 33260 La Teste

Web: http://www.nannidiesel.com
Tel. 33 (0) 5 56 22 30 60
Fax. 33 (0) 5 56 22 30 79

Brand: NanniDiesel

Model: Moteur 5.250TDI

Version: Standard

Subassembly: B2 panel 2 instruments

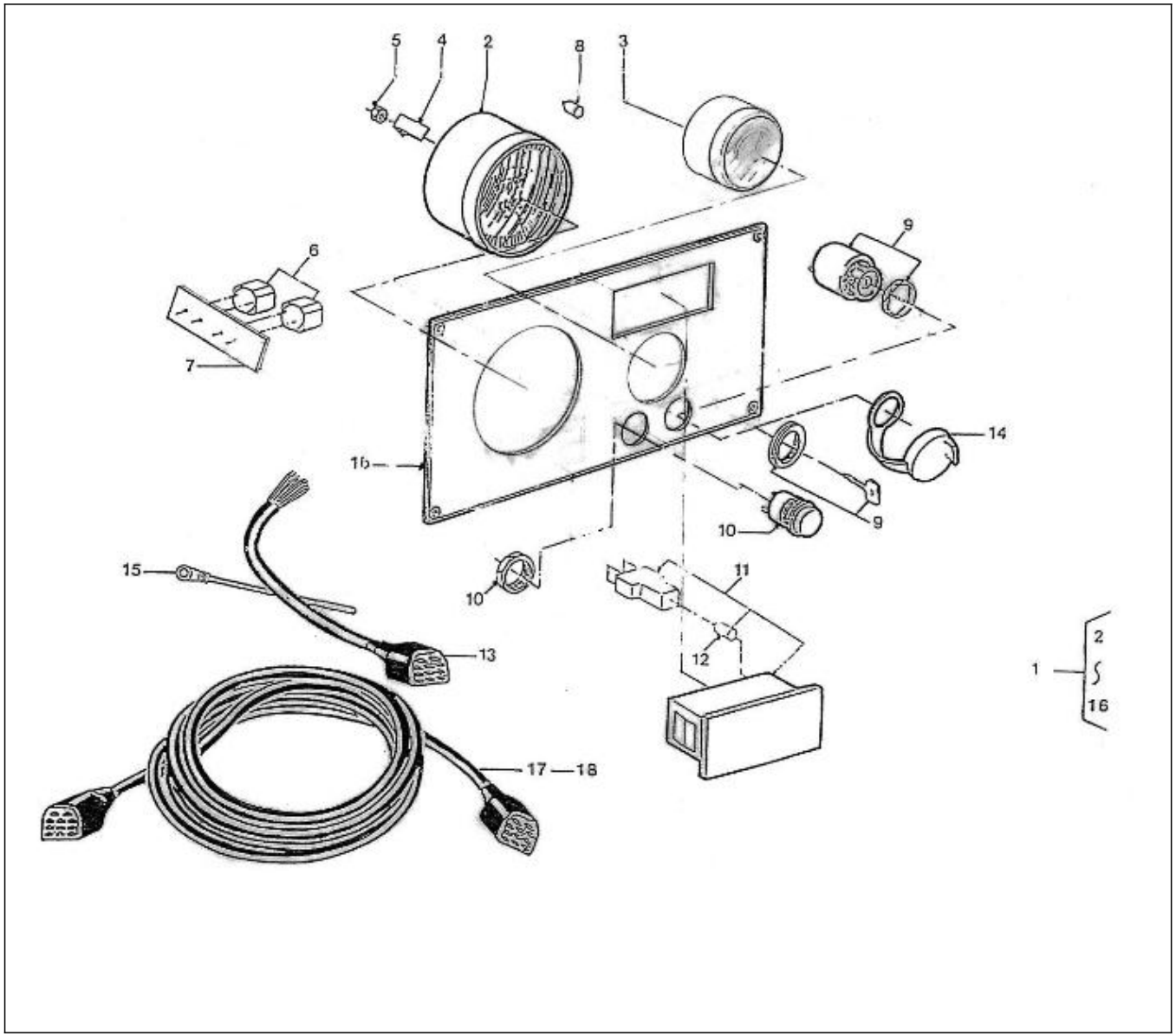

N.	Item	Description	Qty	Notes
1	674350	PANEL	1	
2	48200998	REVOLUTION COUNTER	1	
3	48200999	TEMPERATURE GAUGE	1	
4	970300920	CLAMP,INSTRUMENTS	8	
5	970301191	NUT,M 4 A2	8	
6	970302684	BUZZER,SONITRON SMA 24A P17.05	2	
7	970310182	SUPPORT	1	
8	970856011	BULB 12V-2W	2	
9	970302667	SWITCH,BOSCH STARTER + GLOWING	1	
10	970300967	BUTTON,PUSH	1	
11	970856005	LIGTH WARNING	1	
12	970856011	BULB 12V-2W	1	
13	970302663	WIRING,PANEL 2INSTR. ADDITION	1	
14	970304021	COVER	1	
15	970304019	CABLEBINDER,PLASTIC 4.8X195	1	
16	645200020	PLATE,PANEL	1	
17	970302665	WIRING,INTERMEDIATE 4MTR 11POS	1	
18	970302666	WIRING,INTERMEDIATE 8MTR 11POS	1	

nannidiesel energy in blue

Nanni Industries S.A.
Z.I. - B.P. 107 11, Avenue Mariotte 33260 La Teste

Web: http://www.nannidiesel.com
Tel. 33 (0) 5 56 22 30 60
Fax. 33 (0) 5 56 22 30 79

Brand: NanniDiesel

Model: Moteur 5.250TDI

Version: Standard

Subassembly: Panel 5 instruments

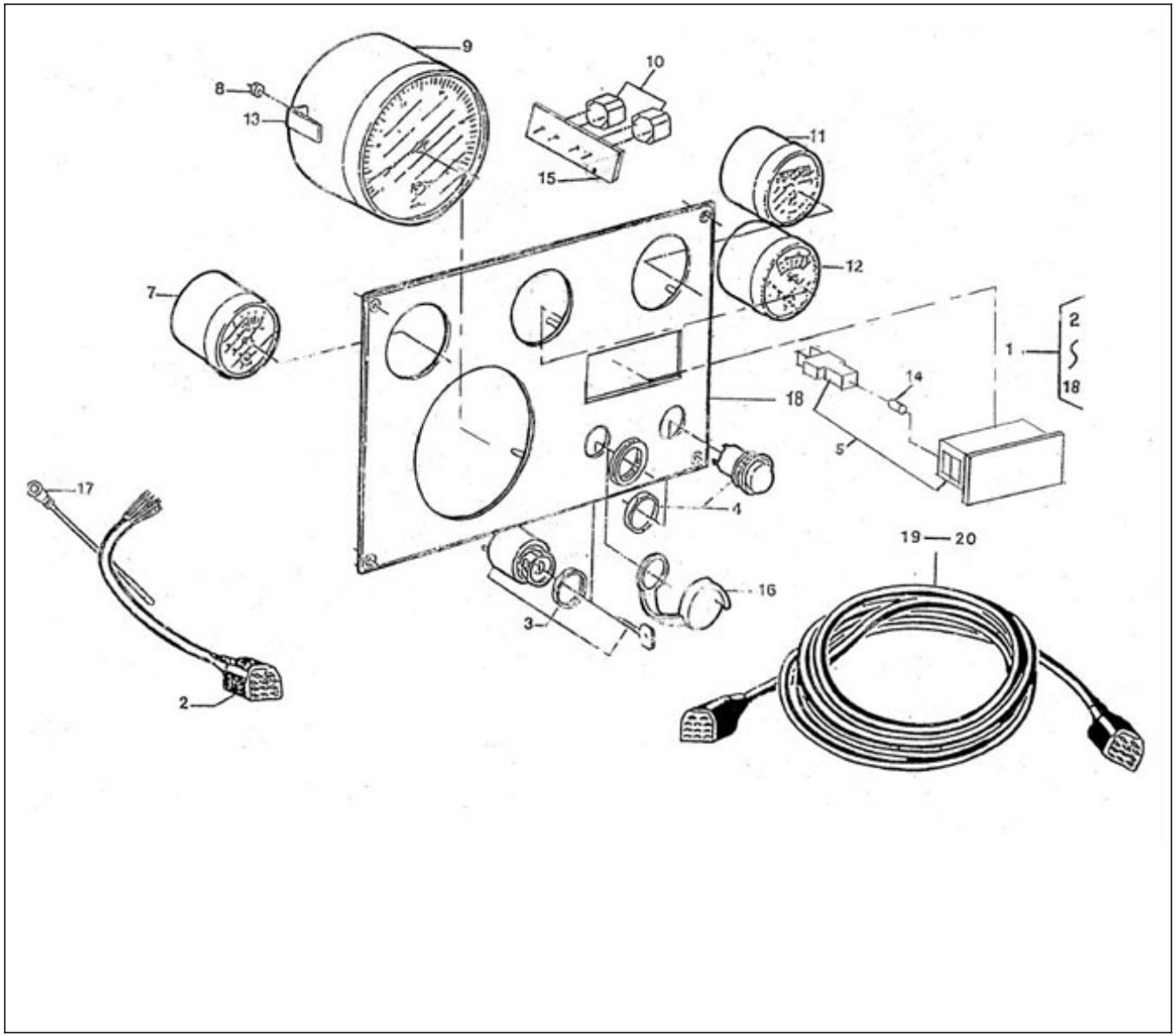

N.	Item	Description	Qty	Notes
1	674349	PANEL,1 INSTR.TACHO CPL VDO	1	
1	674349	PANEL,1 INSTR.TACHO CPL VDO	1	
2	970304004	WIRING,PANEL 5INSTR. CPL. (11P	1	
2	970304004	WIRING,PANEL 5INSTR. CPL. (11P	1	
3	970302667	SWITCH,BOSCH STARTER + GLOWING	1	
3	970302667	SWITCH,BOSCH STARTER + GLOWING	1	
4	970300967	BUTTON,PUSH	1	
4	970300967	BUTTON,PUSH	1	
5	970856005	LIGTH WARNING	1	
5	970856005	LIGTH WARNING	1	
6	970850603	THERM.V. 120C 12V D52	1	
6	970856005	LIGTH WARNING	1	
7	48200999	TEMPERATURE GAUGE	1	
7	970850705	OIL PRESSURE GAUGE 5B	1	
8	970301191	NUT,M 4 A2	12	
8	970301191	NUT,M 4 A2	12	
9	48200998	REVOLUTION COUNTER	1	
9	970300910	GAUGE,VDO,TACH,3000,W ,D 85	1	
10	970302684	BUZZER,SONITRON SMA 24A P17.05	2	
10	970302684	BUZZER,SONITRON SMA 24A P17.05	2	
11	48201001	VOLTMETER	1	
11	970300742	GAUGE,VDO,HOUR,2P,D 52	1	
12	970850801	VOLTMETER	1	
12	48201000	OIL PRESSURE GAUGE 5B	1	
13	970300920	CLAMP,INSTRUMENTS	12	
13	970300920	CLAMP,INSTRUMENTS	12	
14	970856011	BULB 12V-2W	9	
14	970856011	BULB 12V-2W	9	
15	970310182	SUPPORT	1	
15	970310182	SUPPORT	1	
16	970304021	COVER	1	
16	970304021	COVER	1	
17	970304019	CABLEBINDER,PLASTIC 4.8X195	1	
17	970304019	CABLEBINDER,PLASTIC 4.8X195	1	
18	970300790	PLATE,PANEL 5 INSTRUMENTS VDO	1	
18	645200019	PLATE,PANEL	1	
19	970302665	WIRING,INTERMEDIATE 4MTR 11POS	1	
19	970302665	WIRING,INTERMEDIATE 4MTR 11POS	1	
20	970302666	WIRING,INTERMEDIATE 8MTR 11POS	1	
20	970302666	WIRING,INTERMEDIATE 8MTR 11POS	1	

nannidiesel energy in blue

Nanni Industries S.A.
Z.I. - B.P. 107 11, Avenue Mariotte 33260 La Teste

Web: http://www.nannidiesel.com
Tel. 33 (0) 5 56 22 30 60
Fax. 33 (0) 5 56 22 30 79

Brand: NanniDiesel

Model: Moteur 5.250TDI

Version: Standard

Subassembly: Stop solenoid

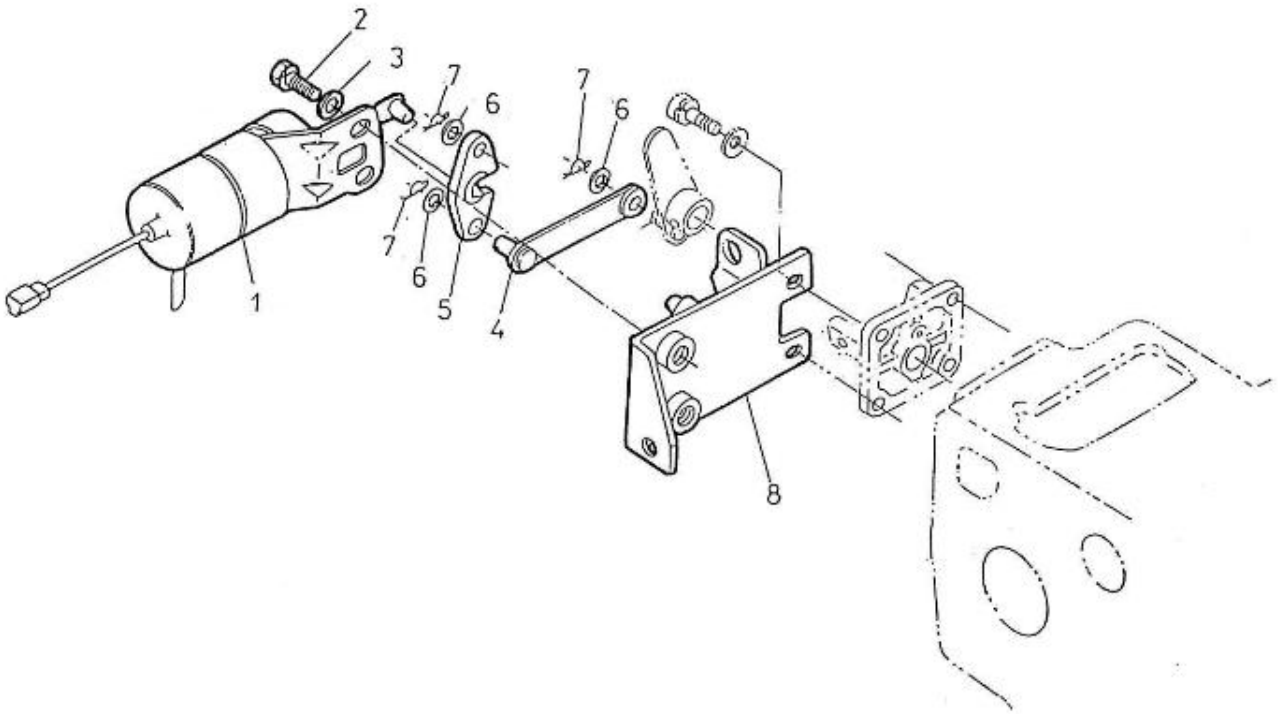

N.	Item	Description	Qty	Notes
1	970307362	SOLENOID,STOP	1	
2	970490919	BOLT,M 8X 16	2	
3	970301933	WASHER,PLAIN D 8	2	
4	970307363	LEVER,STOP(1)	1	
5	970307364	LEVER,STOP(2)	1	
6	970141326	WASHER, PLAIN D6	3	
7	970307365	PIN,SNAP	3	

nannidiesel energy in blue

Nanni Industries S.A.
Z.I. - B.P. 107 11, Avenue Mariotte 33260 La Teste

Web: http://www.nannidiesel.com
Tel. 33 (0) 5 56 22 30 60
Fax. 33 (0) 5 56 22 30 79

Brand: NanniDiesel

Model: Moteur 5.250TDI

Version: Standard

Subassembly: Electrics

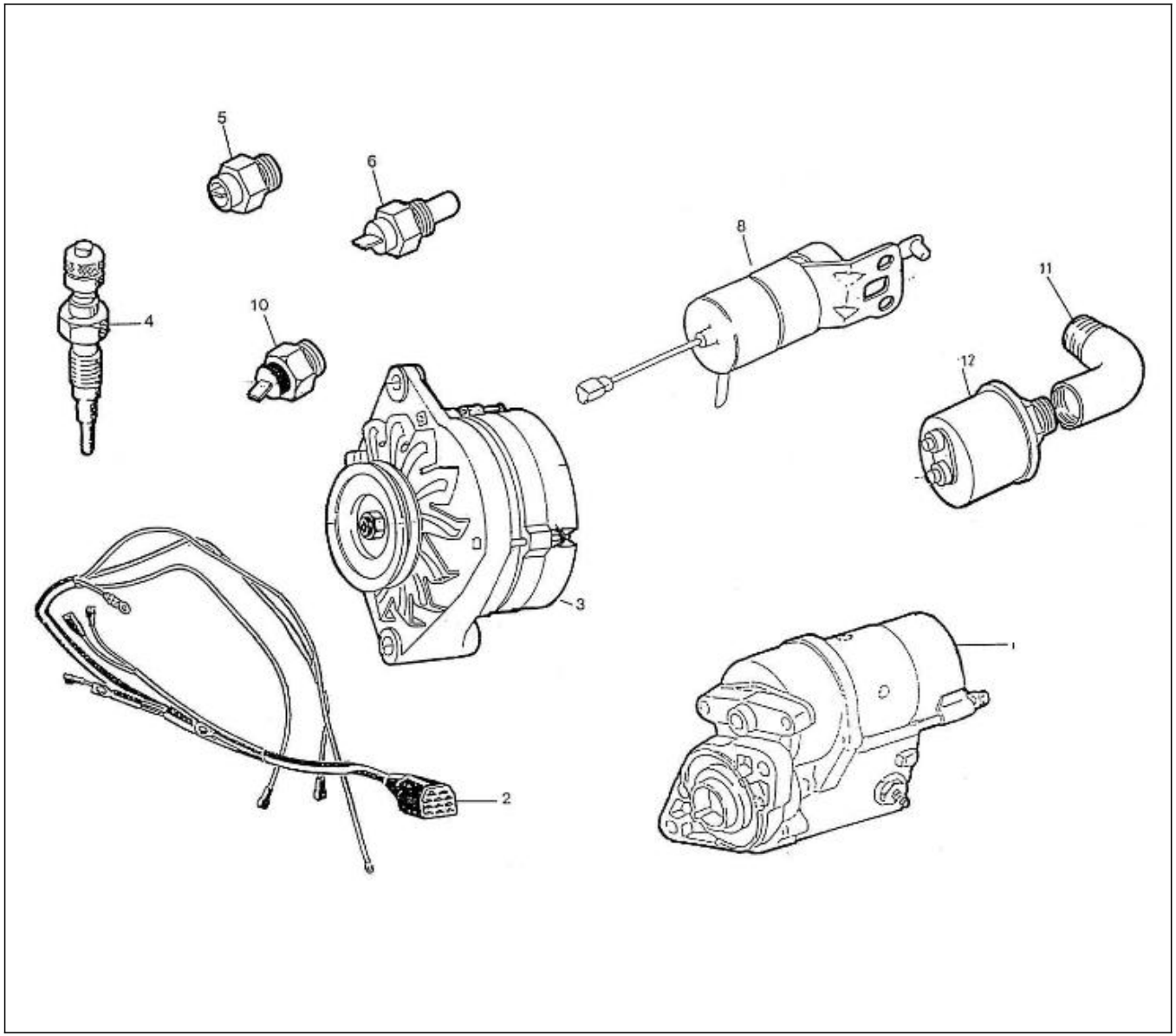

N.	Item	Description	Qty	Notes
1	970302070	STARTER,MOTOR 12V 0,8KW	1	
2	970302661E	WIRING	1	
3	970307522	ALTERNATOR,14V-60A	1	
4	970307393	GLOW PLUG	1	
5	970304054	TEMPERATURE SWITCH 1/8 1P 97¦C	1	
6	970851602	WATER TEMPERATURE SENDER	1	
7	970851602	WATER TEMPERATURE SENDER	1	
8	970307362	SOLENOID,STOP	1	
9	970307362	SOLENOID,STOP	1	
10	970851700	SWITCH,OIL	1	
11	970493207	ELBOW,1/8X10X1,5MF	1	
12	970307091	OIL PRESSURE SENDER	1	

nannidiesel energy in blue

Nanni Industries S.A.
Z.I. - B.P. 107 11, Avenue Mariotte 33260 La Teste

Web: http://www.nannidiesel.com
Tel. 33 (0) 5 56 22 30 60
Fax. 33 (0) 5 56 22 30 79

Brand: NanniDiesel

Model: Moteur 5.250TDI

Version: Standard

Subassembly: Flywheel housing

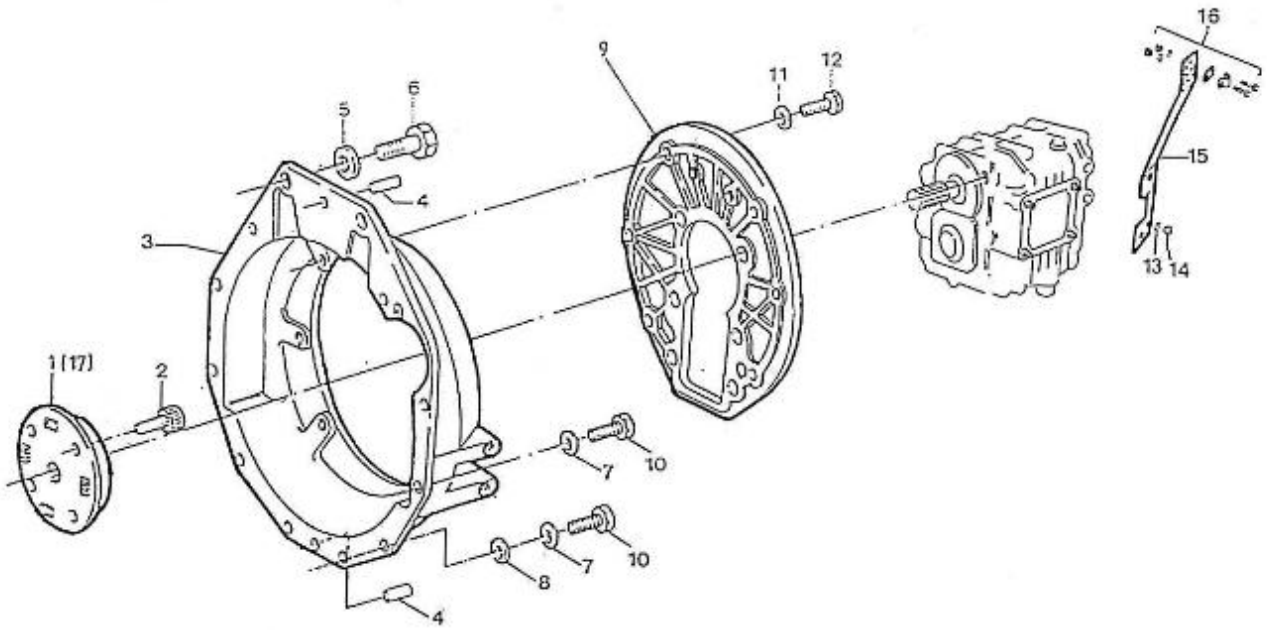

N.	Item	Description	Qty	Notes
1	970310255	TM 345A COUPLING	1	
2	970119141	BOLT,HEX M8X 20	6	
3	970119139	WASHER,CORRUGATED D8	6	
4	970302149	PIN,CYLINDRICAL D10X 20	2	
5	970647606	WASHER,CORRUGATED D12	2	
6	970301736	BOLT,HEX M12X1,25X 30	2	
7	970119139	WASHER,CORRUGATED D8	16	
8	970027323	WASHER,PLAIN D 8	2	
9	970302342	PLATE,ADAPTOR -HBW250-	1	
10	970119141	BOLT,HEX M8X 20	16	
11	970119137	WASHER,CORRUGATED D10	6	
12	970635508	BOLT,HEX M10X 25	6	
13	970119139	WASHER,CORRUGATED D8	2	
14	970027322	NUT,M 8	2	
15	605303006	SUPPORT	1	
15	970300373	SUPPORT,CONTROL HBW	1	
16	970835020	CLAMP	1	
17	970310215	COUPLING	1	

nannidiesel energy in blue

Nanni Industries S.A.
Z.I. - B.P. 107 11, Avenue Mariotte 33260 La Teste

Web: http://www.nannidiesel.com
Tel. 33 (0) 5 56 22 30 60
Fax. 33 (0) 5 56 22 30 79

Brand: NanniDiesel

Model: Moteur 5.250TDI

Version: Standard

Subassembly: Reversing gear

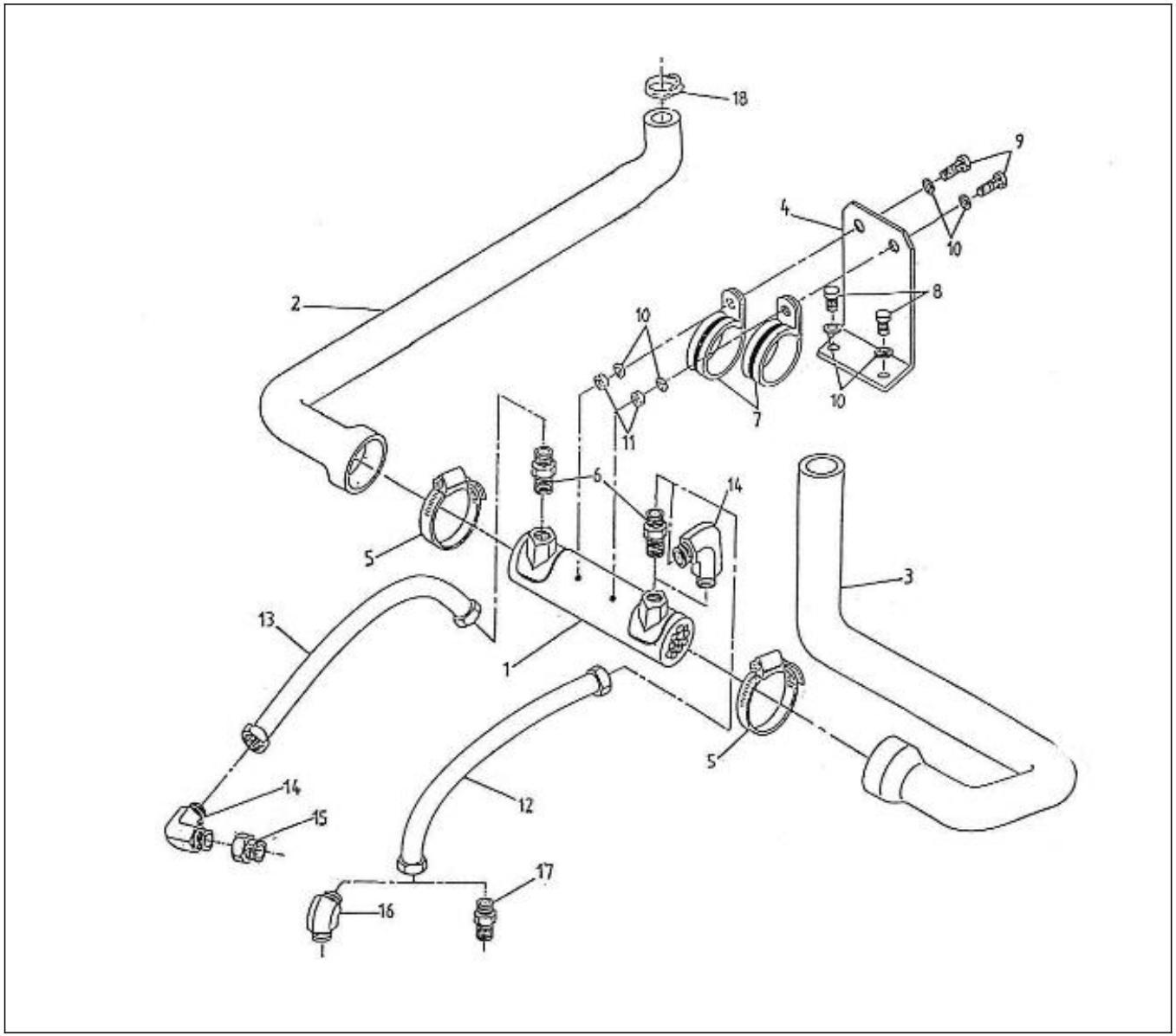

N.	Item	Description	Qty	Notes
1	970310247	OIL COOLER	1	
2	48328060	HOSE	1	
3	48328059	HOSE	1	
4	95310311	BRACKET	1	
4	95310335	BRACKET	1	
5	970634621	CLAMP,HOSE 44-56	2	
6	48300308	ELBOW	2	
7	48100189	CLAMP	2	
8	970119141	BOLT,HEX M8X 20	2	
9	970119141	BOLT,HEX M8X 20	2	
10	970027323	WASHER,PLAIN D 8	6	
11	970024015	NUT,M 8 A2	2	
12	51819003	HOSE	1	
13	51819003	HOSE	1	
14	48300035	ELBOW 92	3	
15	43360089	ELBOW	1	
16	48300031	ELBOW 45	1	
17	48300084	ELBOW	2	
18	970604526	CLAMP,HOSE 22-32	1	

nannidiesel energy in blue

Nanni Industries S.A.
Z.I. - B.P. 107 11, Avenue Mariotte 33260 La Teste

Web: http://www.nannidiesel.com
Tel. 33 (0) 5 56 22 30 60
Fax. 33 (0) 5 56 22 30 79

Brand: NanniDiesel

Model: Moteur 5.250TDI

Version: Standard

Subassembly: Tools gasket set

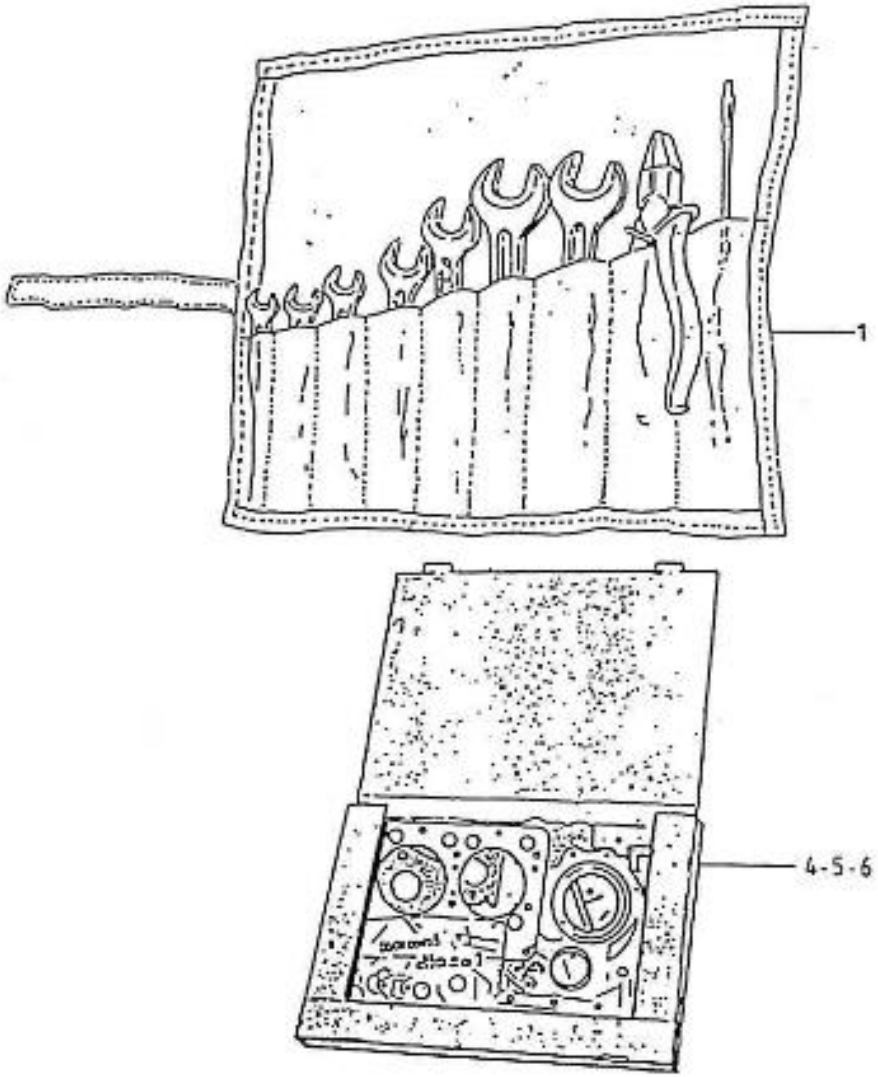

N.	Item	Description	Qty	Notes
1	970609901	KIT,TOOLS	1	
4	970310563	GASKET SET	1	
5	970310564	GASKET SET	1	
6	970310565	GASKET SET	1	

nannidiesel energy in blue

Nanni Industries S.A.
Z.I. - B.P. 107 11, Avenue Mariotte 33260 La Teste

Web: http://www.nannidiesel.com
Tel. 33 (0) 5 56 22 30 60
Fax. 33 (0) 5 56 22 30 79

Brand: NanniDiesel

Model: Moteur 5.250TDI

Version: Standard

Subassembly: Engine mount

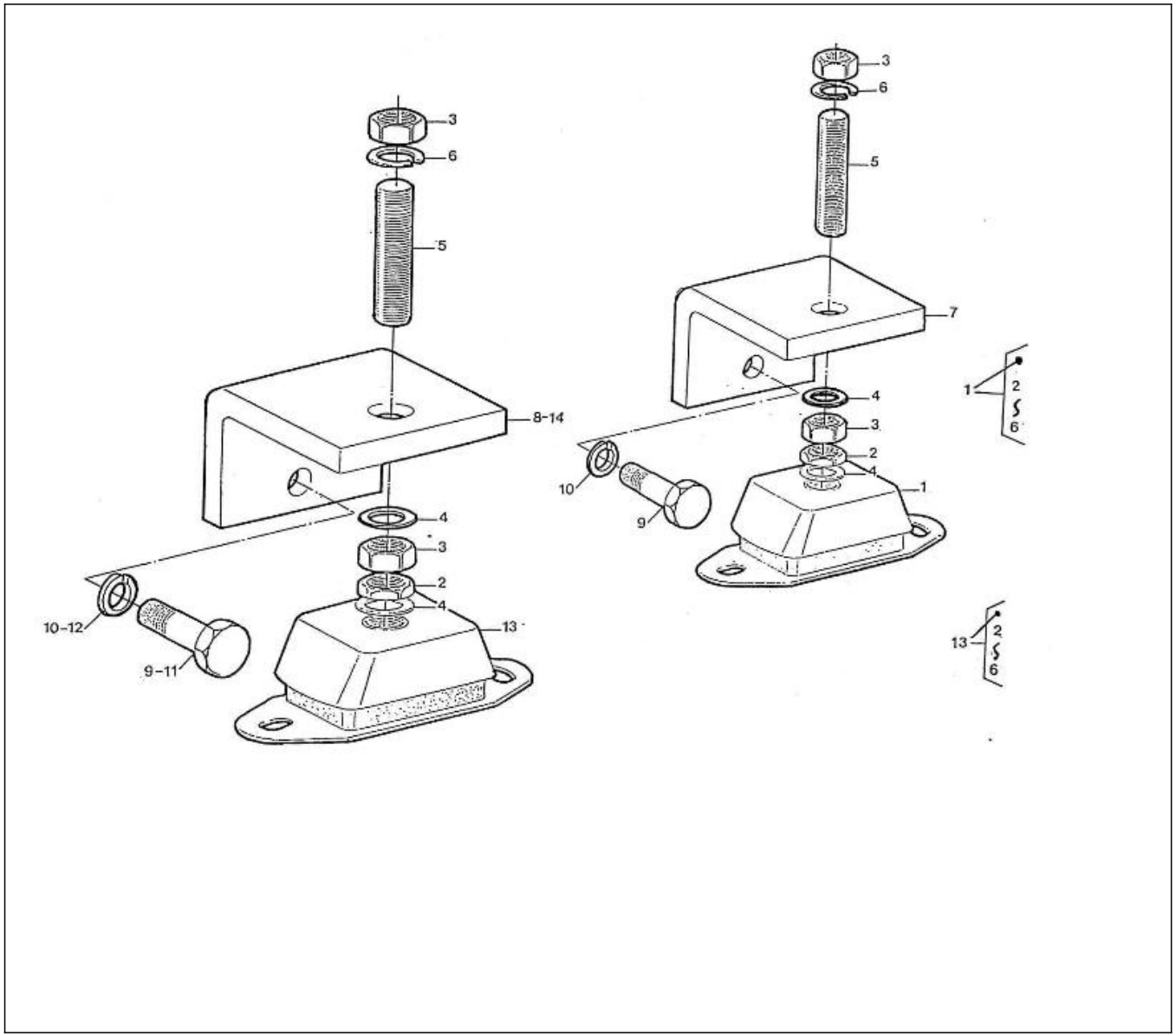

N.	Item	Description	Qty	Notes
1	970301081	MOUNT,RUBBER CPL.55 MEDIUM	2	Jusqu'au N°363073/ R.P 48190025
1	48190025	PLOT MEDIUM 55SH M16 REMPLACE LE 970301081	2	A partir N°363074
2	970639203	NUT,M16 LOW	4	
3	970896520	NUT	8	
4	970649108	WASHER,PLAIN D16	8	
5	970609116	STUD,M16X100	4	
6	970649109	WASHER,SPRING D16	4	
7	95310314	ENGINE MOUNT	2	
8	95310307	ENGINE MOUNT	1	
9	970499051	BOLT,HEX M10X1,25X 30	6	
10	970119136	WASHER,SPRING D10	6	
11	970301736	BOLT,HEX M12X1,25X 30	2	
12	970409154	WASHER,SPRING D12	2	
13	970310517	MOUNT,RUBBER CPL.45 MEDIUM	2	Jusqu'au N°363093/ R.P 48190027
13	48190027	PLOT MEDIUM 45SH M16 REMPLACE 970310517	2	A partir du N°363094
14	95310313	ENGINE MOUNT	0	

nannidiesel energy in blue

Nanni Industries S.A.
Z.I. - B.P. 107 11, Avenue Mariotte 33260 La Teste

Web: http://www.nannidiesel.com
Tel. 33 (0) 5 56 22 30 60
Fax. 33 (0) 5 56 22 30 79

Brand: NanniDiesel

Model: Moteur 5.250TDI

Version: Standard

Subassembly: Spare parts kit

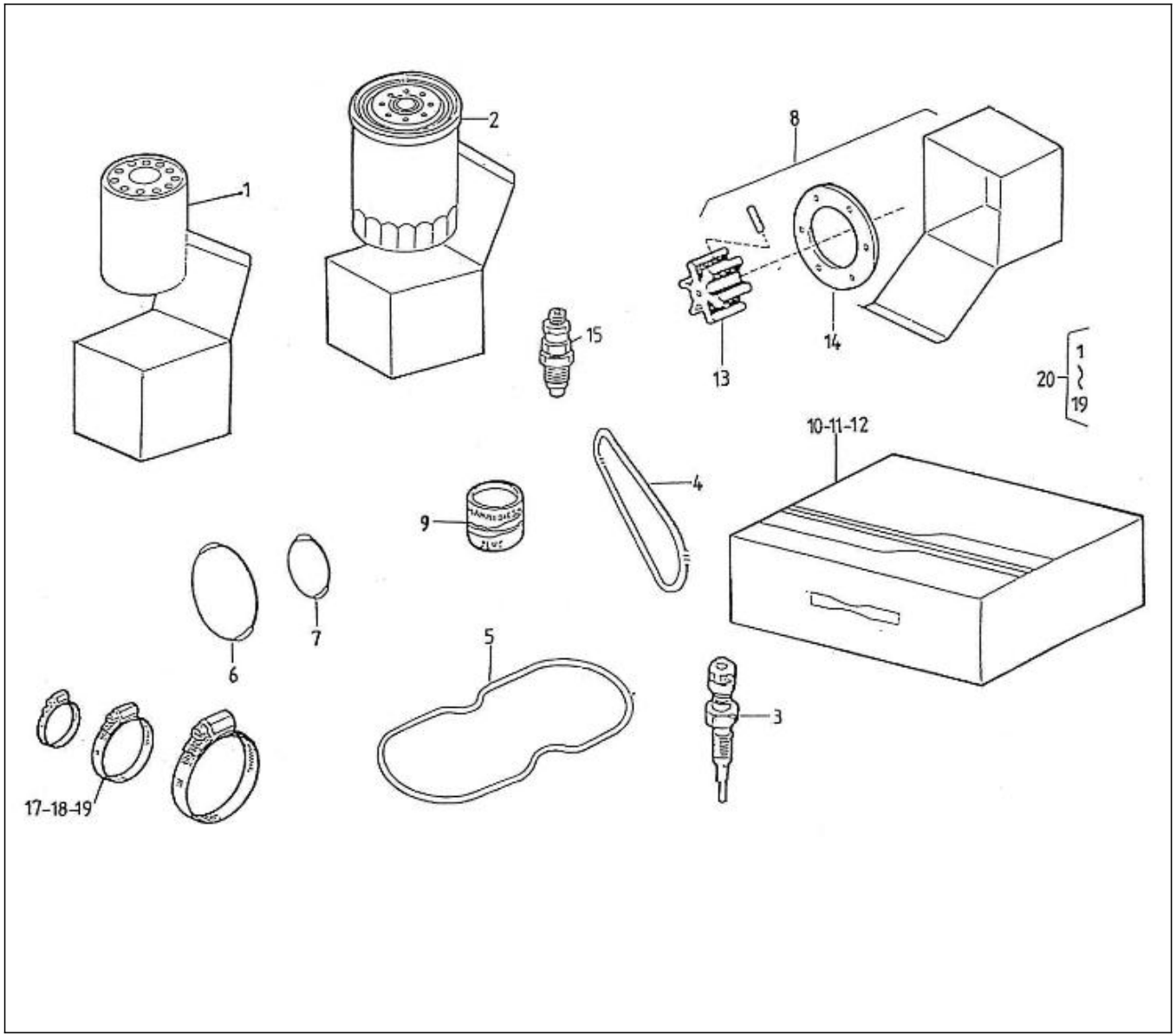

N.	Item	Description	Qty	Notes
1	970310302	FILTER	1	
2	970603003	FILTER,ELEMENT OIL 4.180/90	1	
3	970307393	GLOW PLUG	1	
4	970310301	V-BELT	1	
5	970307917	GASKET,HEAD COVER	1	
6	970310554	O-RING	1	
7	970301719	O-RING,68,00X4,00	1	
8	970301804	REPAIR KIT	1	
9	970301521	PAINT,NANNI BLUE 125CC	1	
10	970310008	CASE	1	
11	970301347	INSERT,CASE	1	
12	970301348	INSERT,CASE BOTTOM	1	
13	970544310	IMPELLER,WATER PUMP F 7B-803	1	
14	970614616	GASKET,F7B	1	
15	970311163	COUPLING	1	
16	970310467	KIT,NOZZLE HOLDER	1	
17	970439306	CLAMP,HOSE 11-17	1	
18	970300922	CLAMP,HOSE 26-38	1	
19	970634621	CLAMP,HOSE 44-56	1	
20	970310562	MAINTENANCE KIT	1	

nannidiesel energy in blue

Nanni Industries S.A.
Z.I. - B.P. 107 11, Avenue Mariotte 33260 La Teste

Web: http://www.nannidiesel.com
Tel. 33 (0) 5 56 22 30 60
Fax. 33 (0) 5 56 22 30 79